LabP 12 / P12 EVO

Instruction Manual rel. 1.2 (10/2019)

- Symbols -

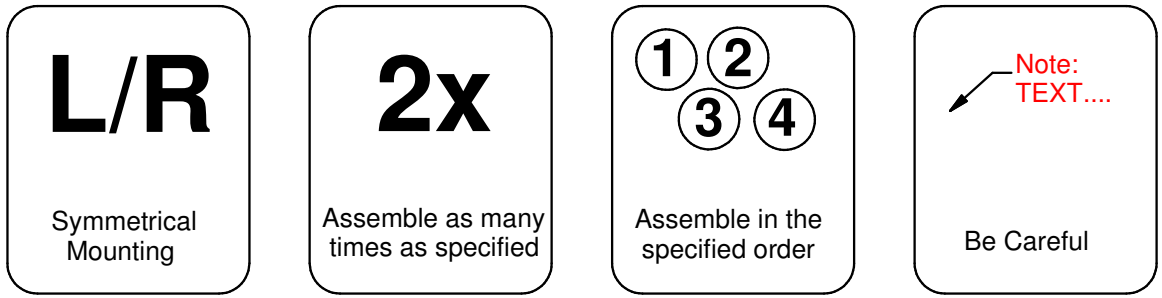

WARNING

This radio control model is not toy.
First time builders should seek the advice of experienced modellers before beginning assembly and/or if they do not fully understand any part of the construction.We highly advise to read the instruction manual before assembly, and to always keep it at hand for reference. Take care before operating this model; you are responsible for its assembly and safe operation. The extreme performance of this model could be understimated by inexpert drivers and could damage objects and/or people. Assembly this kit only in places out of children's reach!
CAPRICORN RC is not responsible for any damage or harm caused by improper use or assembly.
CAPRICORN RC and its distribution network are not responsible for any damage caused by shipping or handling.
Eventual parts missing from the kit or flawed must be reported within two weeks of purchase to your local hobby shop or distributor. For best performance, we highly advise to only use original authentic CAPRICORN RC parts.
For customer support and service please contact your local hobby shop or agent from whom you purchased this item.
Contents of box may slightly differ from the pictures shown. Construction tools, body, tires,radio system and servo, ESC, motor and battery pack are NOT INCLUDED unless otherwise stated.

Capricorn RC

Tools needed for assembly (NOT INCLUDED)

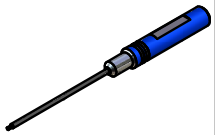
Hex Wrench
1,5/2/2,5/3mm

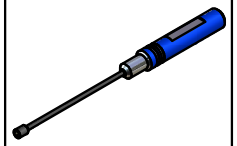
Box Wrench
7mm

Reamer

Cutter

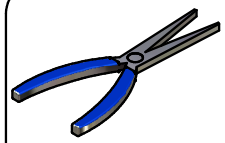
Pliers

Double side
Tape

Fiber Glass
Tape

Parts for model completion and Start (NOT INCLUDED)

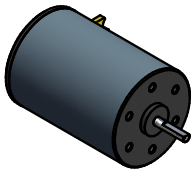
17.5-21.5T Motor

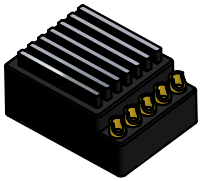
ESC

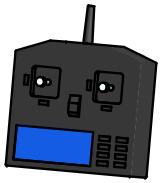
Transmitter

Receiver

Steering
Low Profile Servos

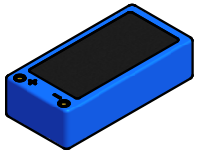
Li-PoBattery Pack

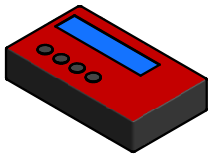
Battery Charger

Also required: Tires - F1 Polycarbonat body - Front & Rear Wing

Made in Italy

Step 1.0

- Front Assembly - BAG 1

Capricorn RC

Note:
Apply CA glue to the chassis edges to seal

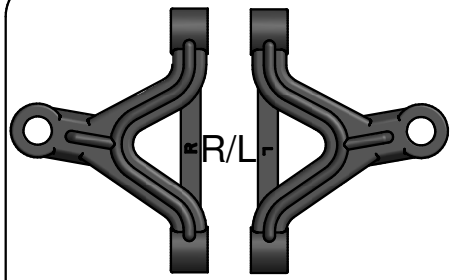

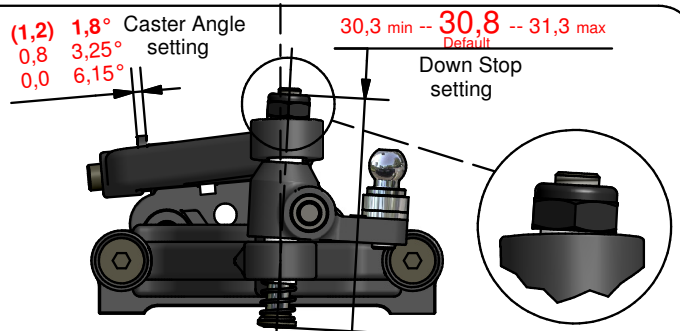

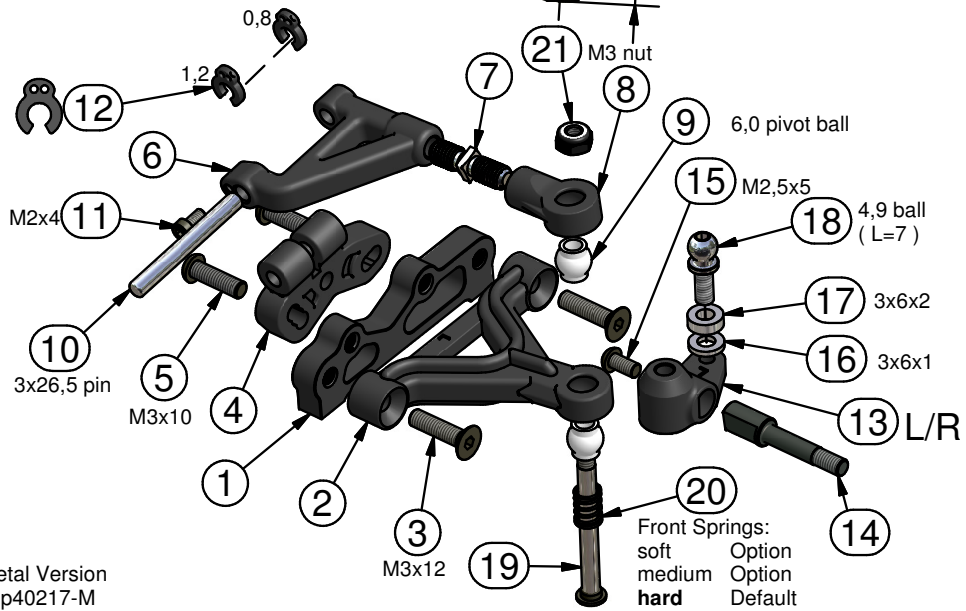

Option Metal Version
code Cap40217-M

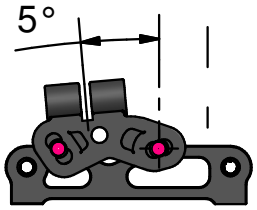

REACTIVE CASTER

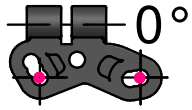

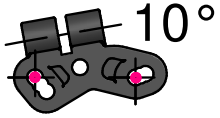

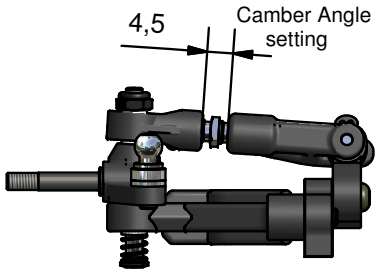

Made in Italy

Step 1.1 - Front / Center Assembly - BAG 1

Capricorn RC

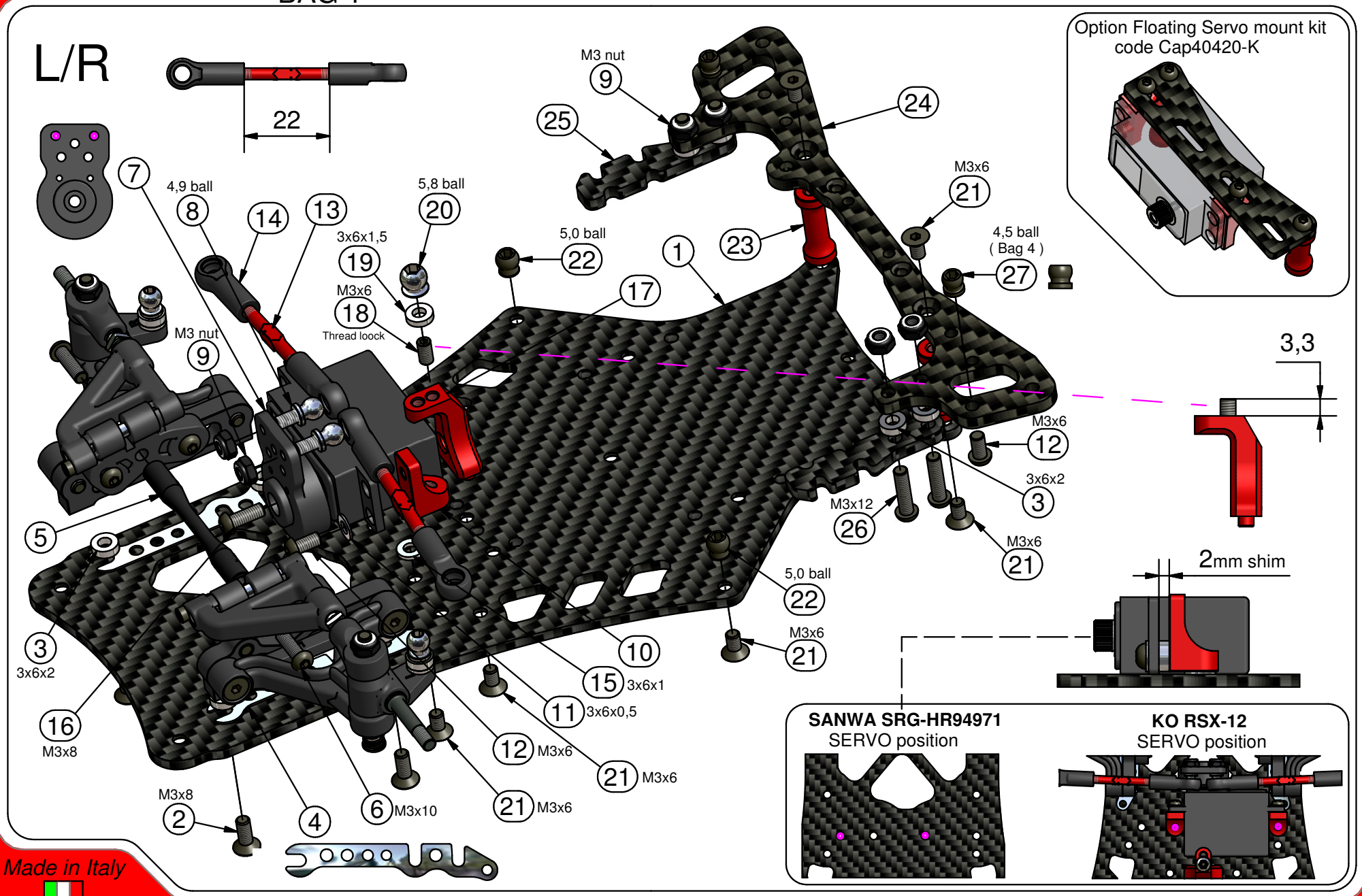

Made in Italy

Step 2.0

- Center Assembly - BAG 2

Capricorn RC

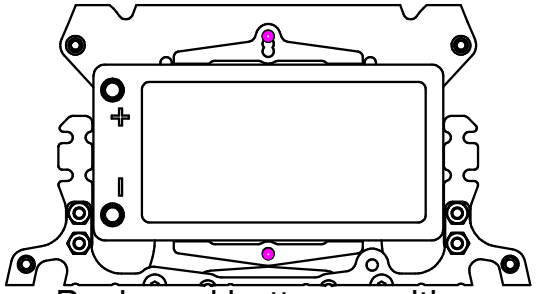

Backward battery position

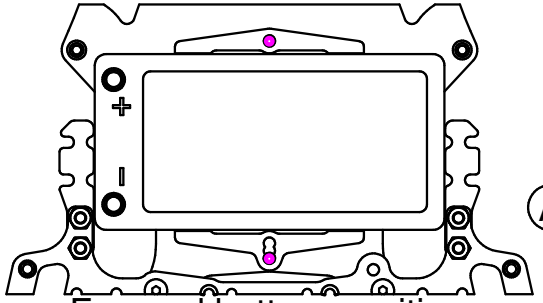

Forward battery position

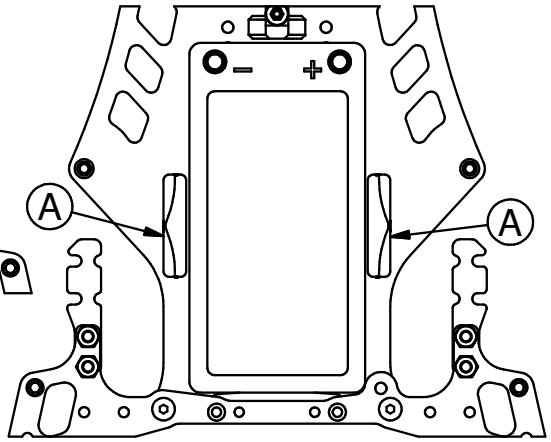

Longitudinal battery position

Note:
With longitudinal battery position use Ⓐ parts
Do not mount ⑤ ⑥ carbon parts

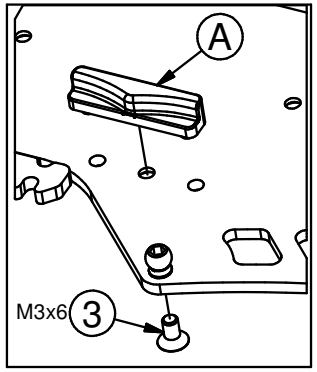

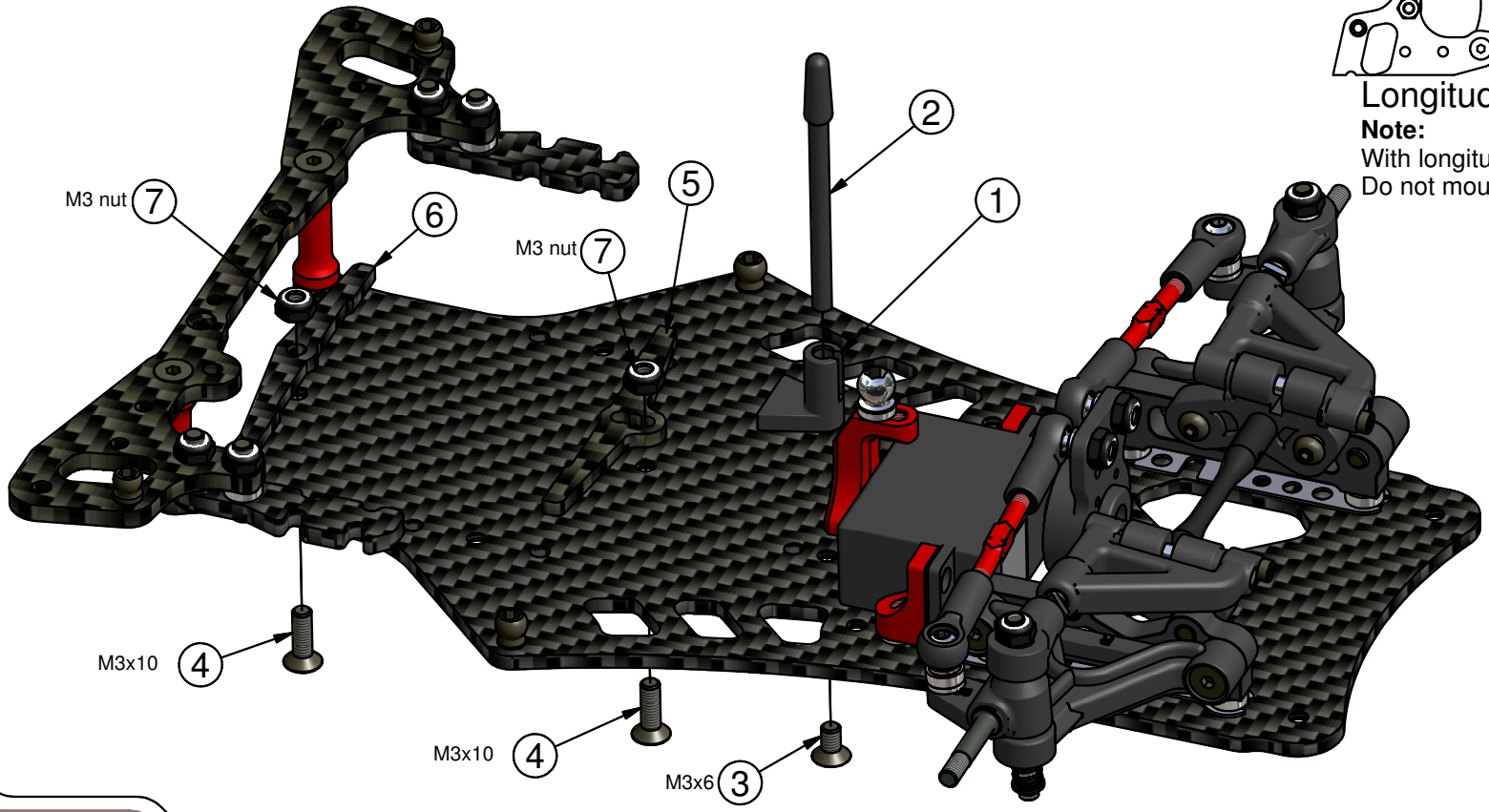

Made in Italy

Step 2.1 - Bumper & body mount - BAG 2

Capricorn RC

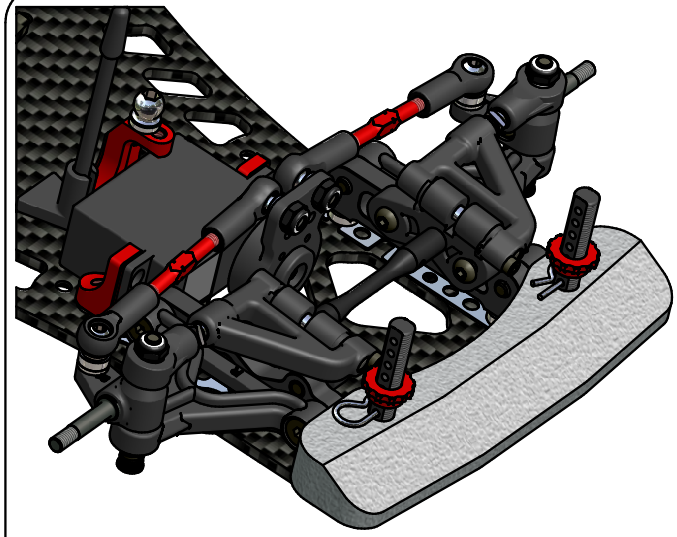

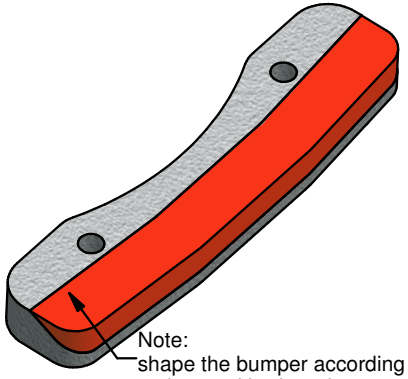

L/R

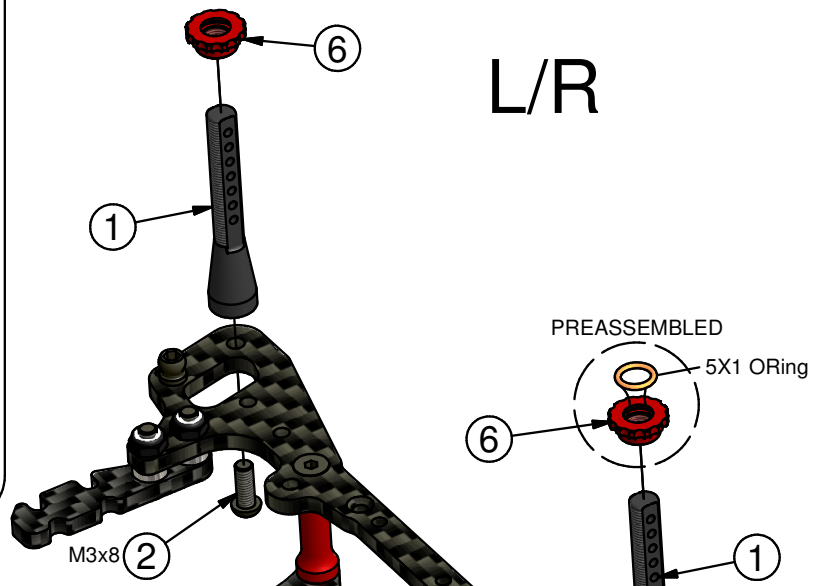

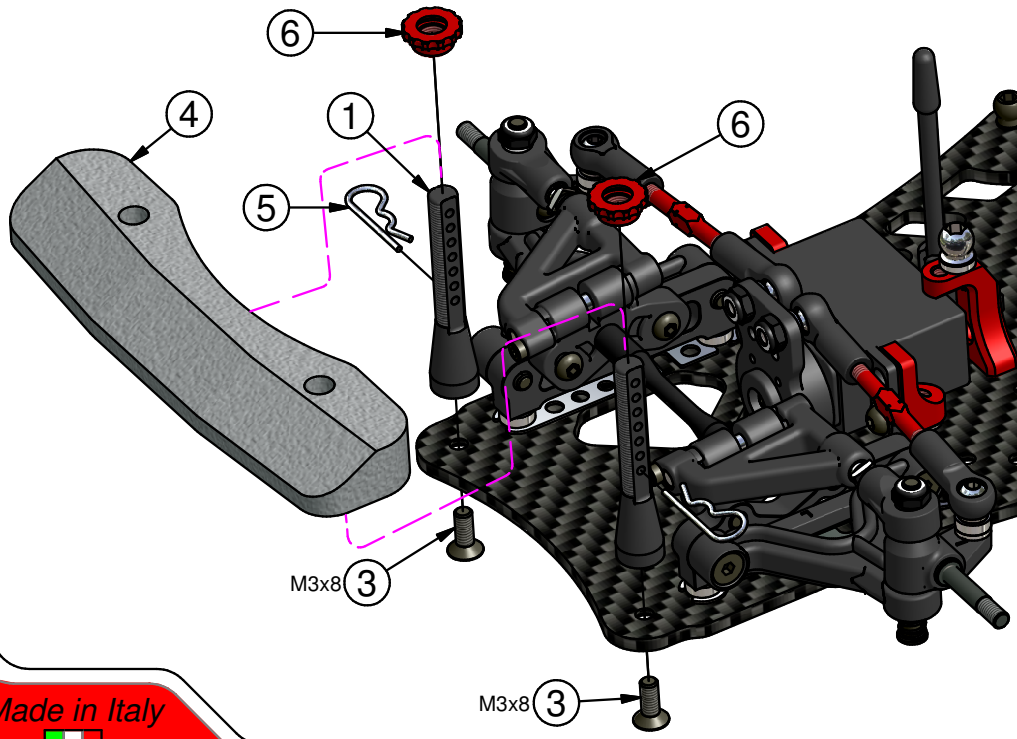

Made in Italy

Step 3.0 - Rear Assembly - BAG 3

Capricorn RC

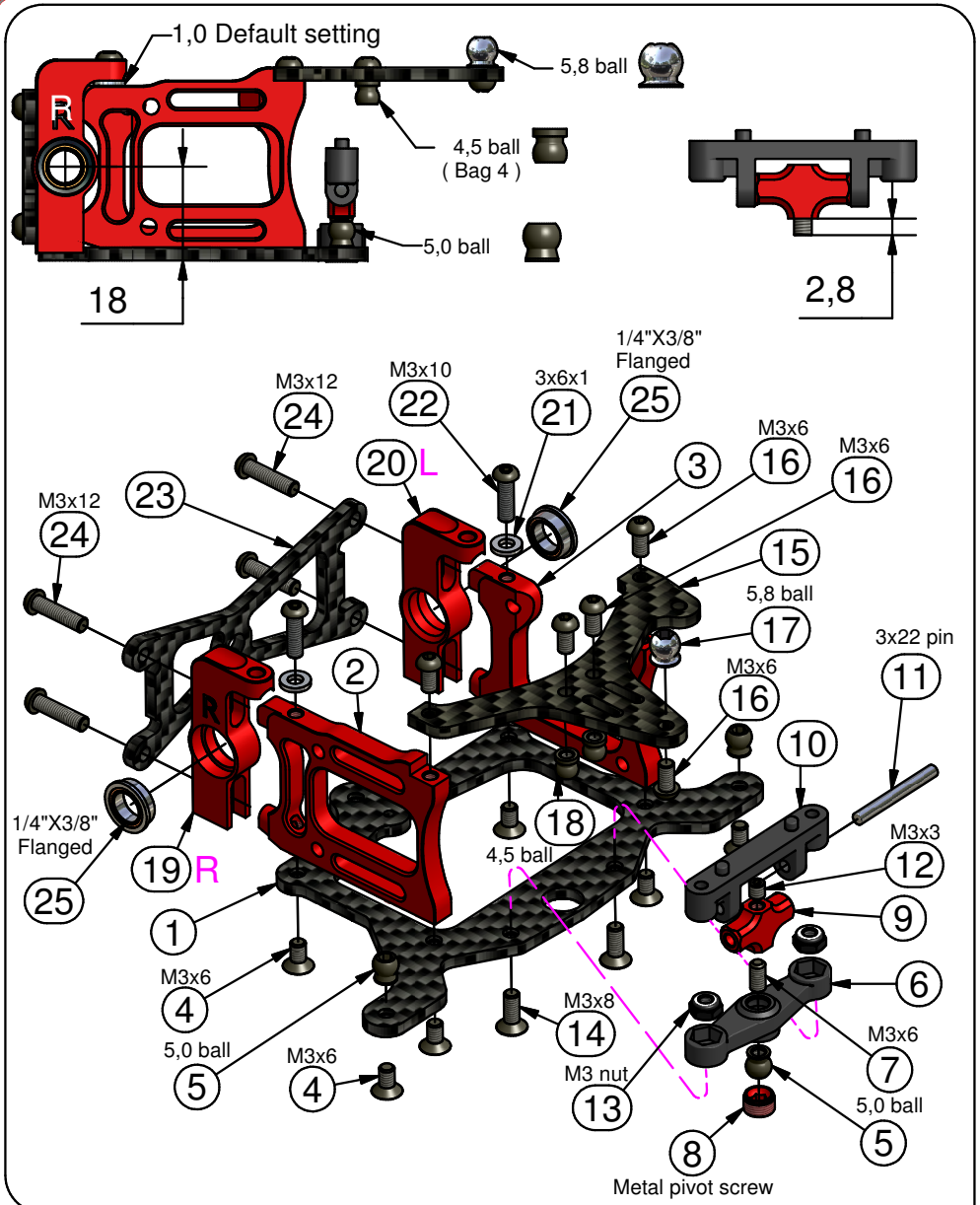

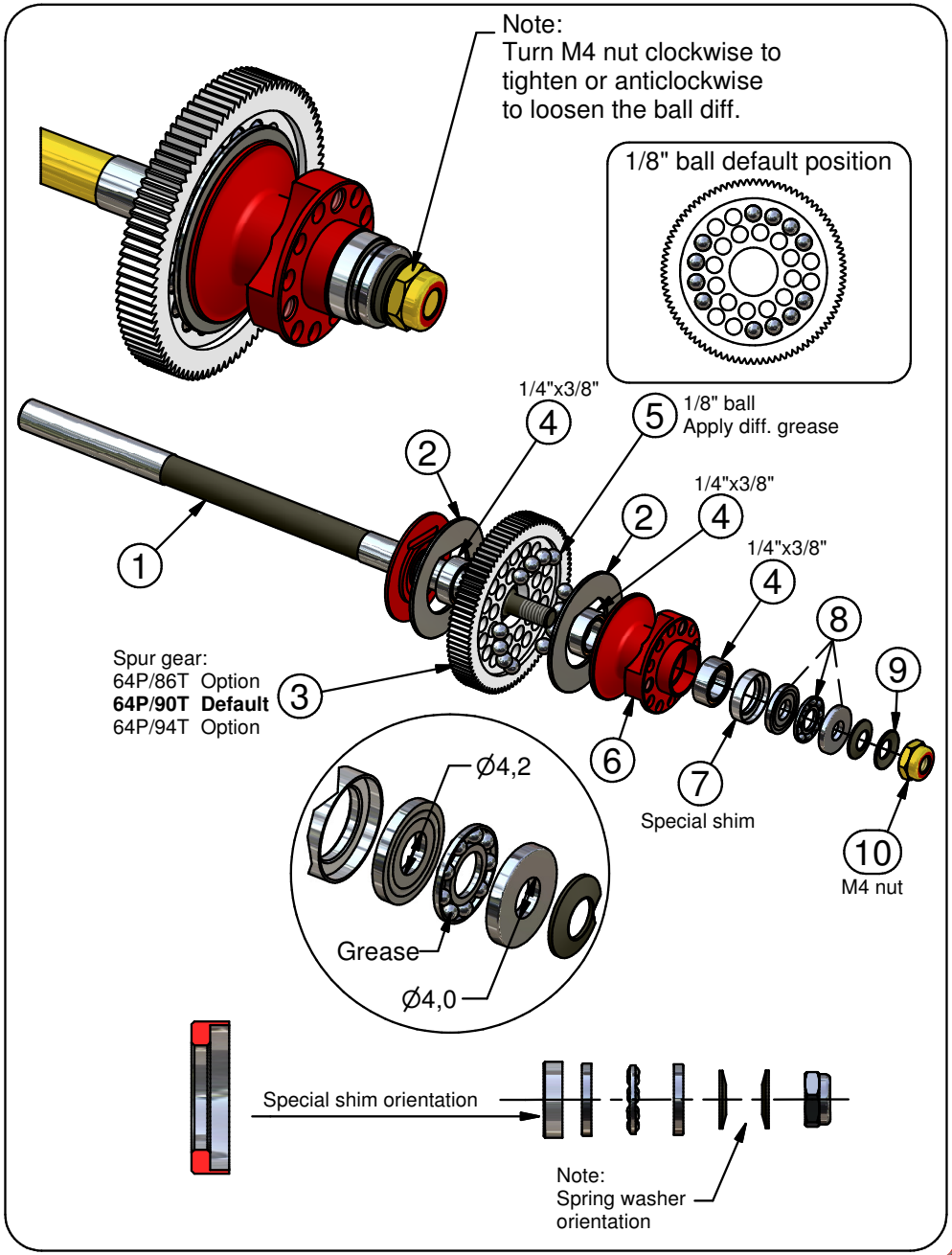

Made in Italy

Step 3.1

- Rear Assembly - BAG 3

Capricorn RC

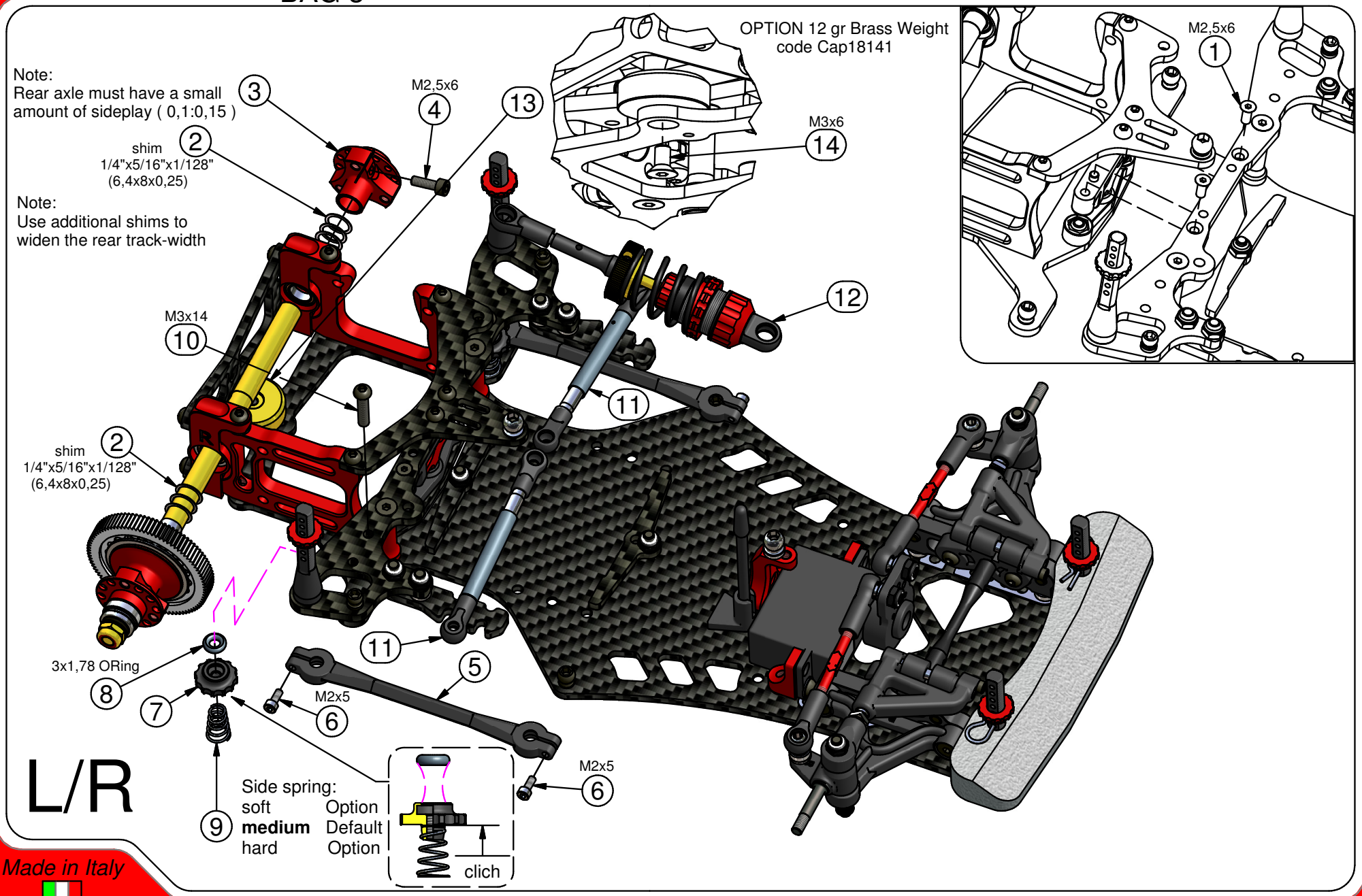

Made in Italy

Step 4.0

- Shocks -
BAG 4

Capricorn RC

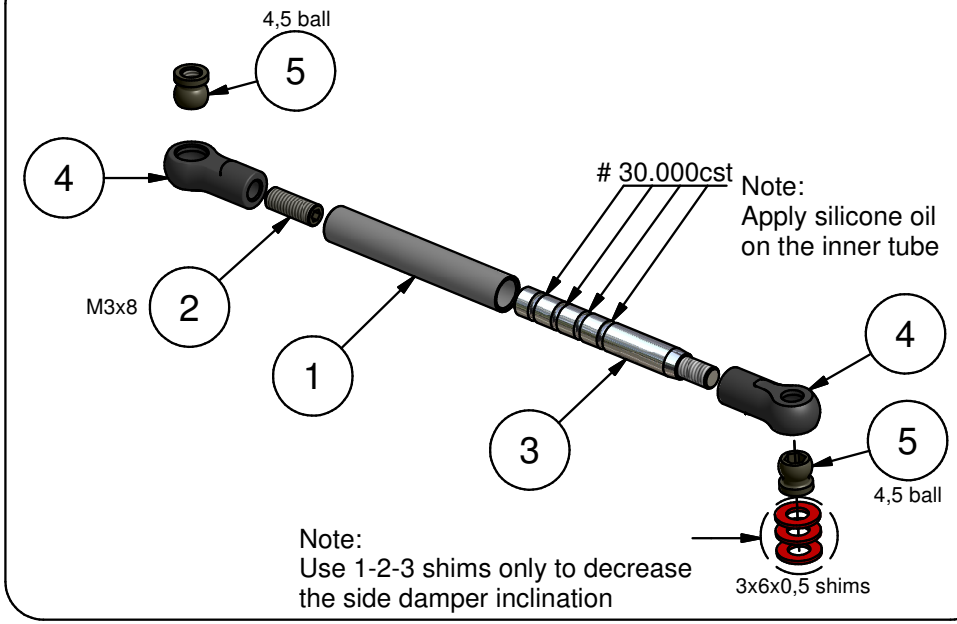

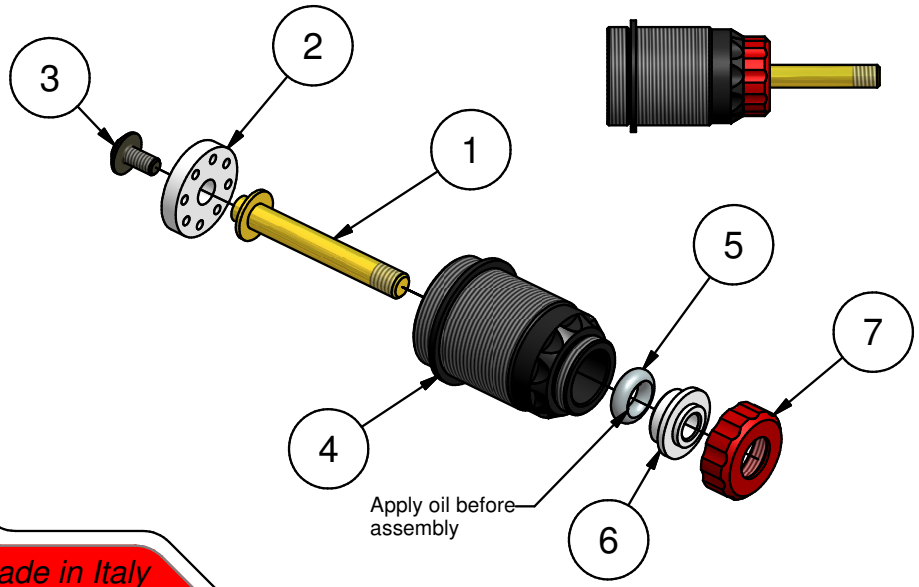

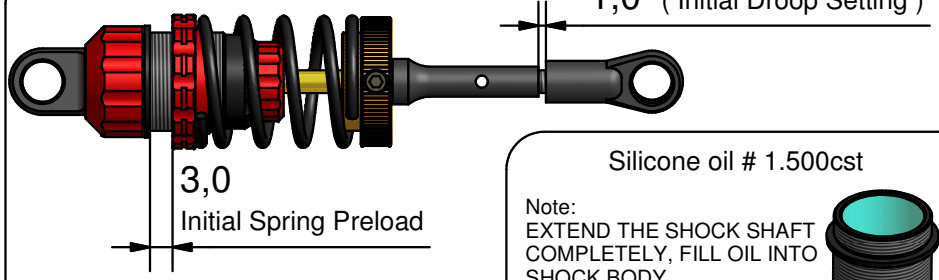

Silicone oil # 1.500cst

Note:
EXTEND THE SHOCK SHAFT COMPLETELY, FILL OIL INTO SHOCK BODY.

MOVE SHAFT UP AND DOWN SLOWLY TO REMOVE ALL AIR BUBBLES.

WHEN INSTALLING OIL SEALER CUP, EXCESS OIL WILL LEAK OUT FROM THE FILLED BODY

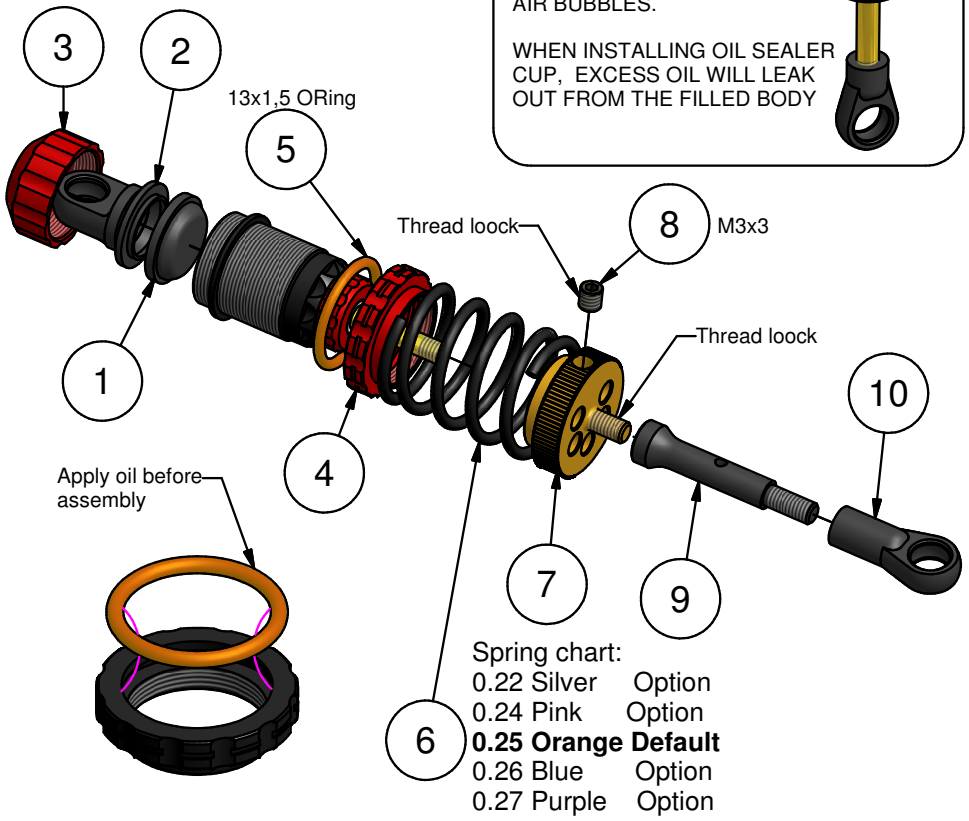

Spring chart:

0.22 Silver	Option
0.24 Pink	Option
0.25 Orange	**Default**
0.26 Blue	Option
0.27 Purple	Option

Made in Italy

Step 5.0 - Electronics Assembly - BAG 5

Capricorn RC

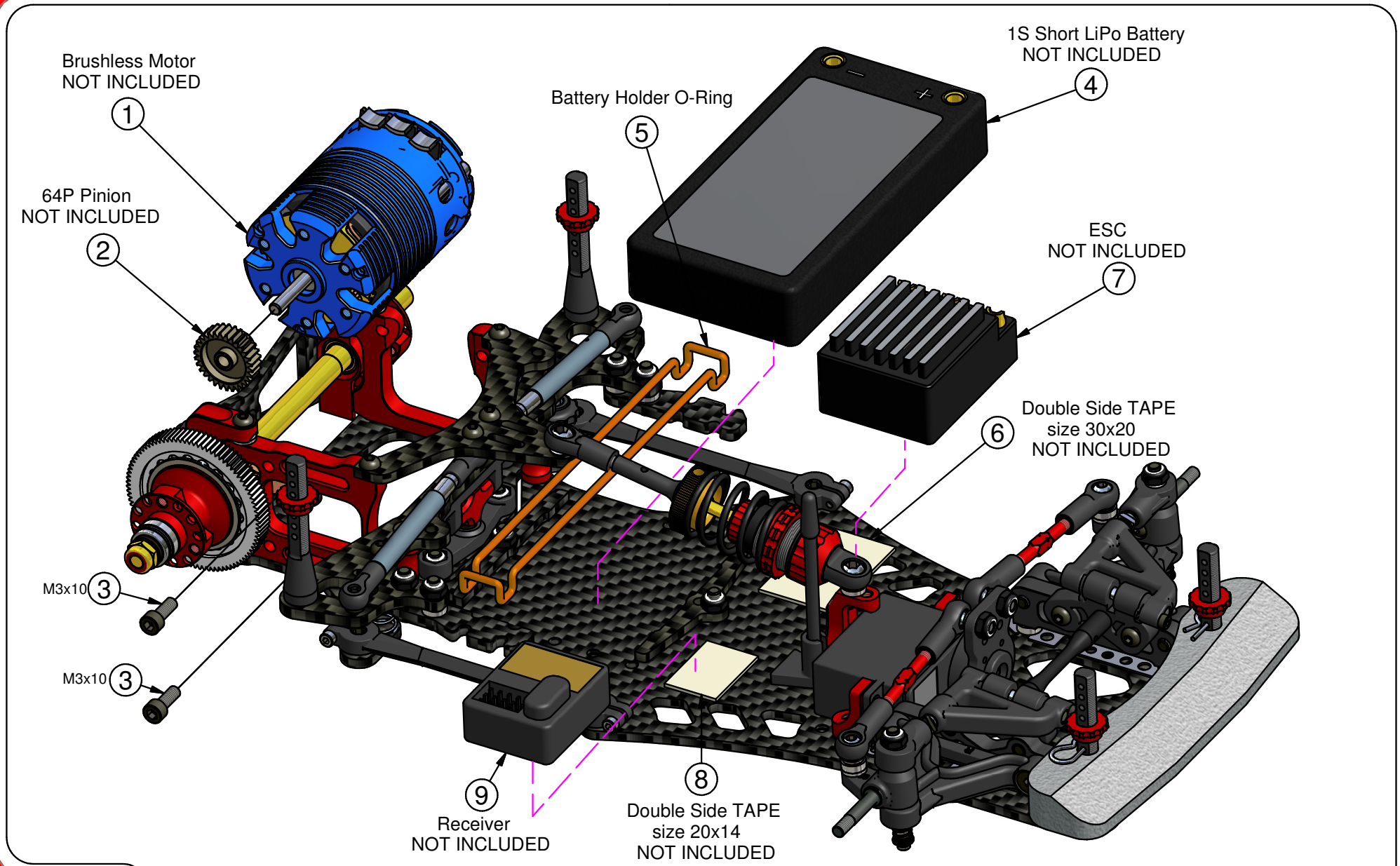

Made in Italy

Step 5.1

- Wheel Assembly -
BAG 5

Capricorn RC

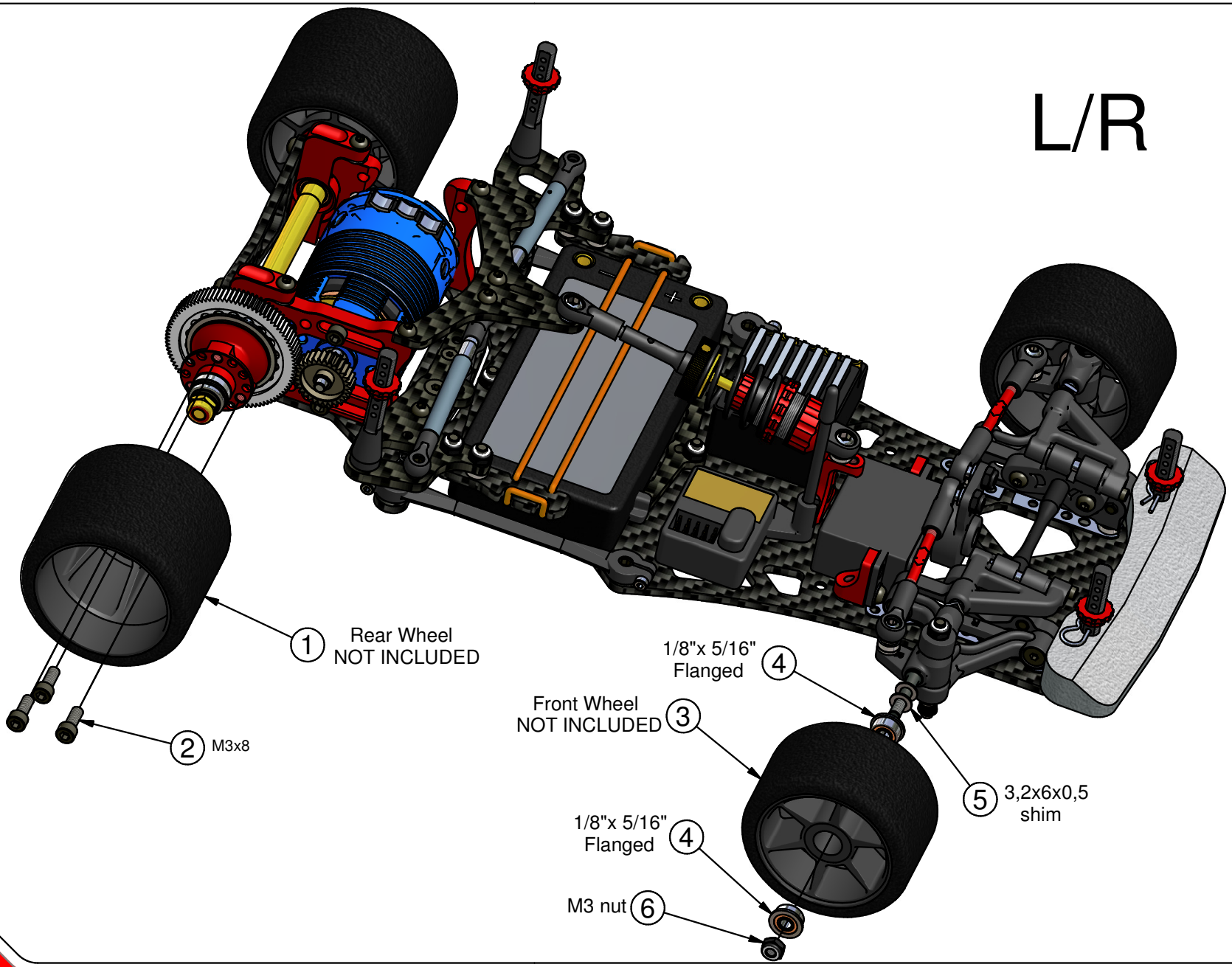

Made in Italy

Step 5.2 - Final Assembly View -

Capricorn RC

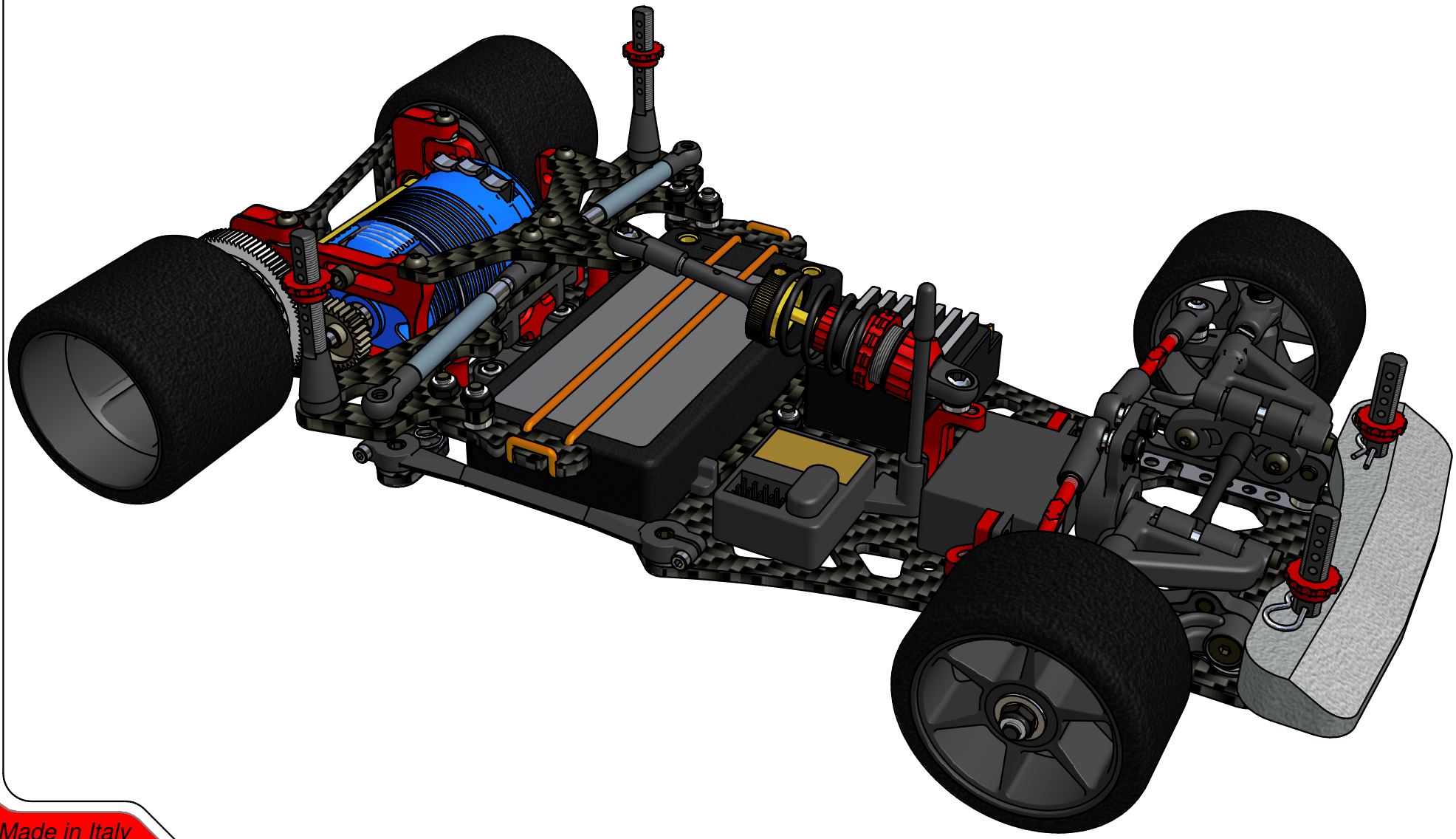

Made in Italy

P12 DEFAULT SET-UP SHEET

Capricorn RC

RACE		DATE	
TRACK		QUALIFING POSITION	
NAME		BEST LAP	/sec
CITY/ COUNTRY		RACE POSITION	
CONTACT		RACE LENGTH	/min

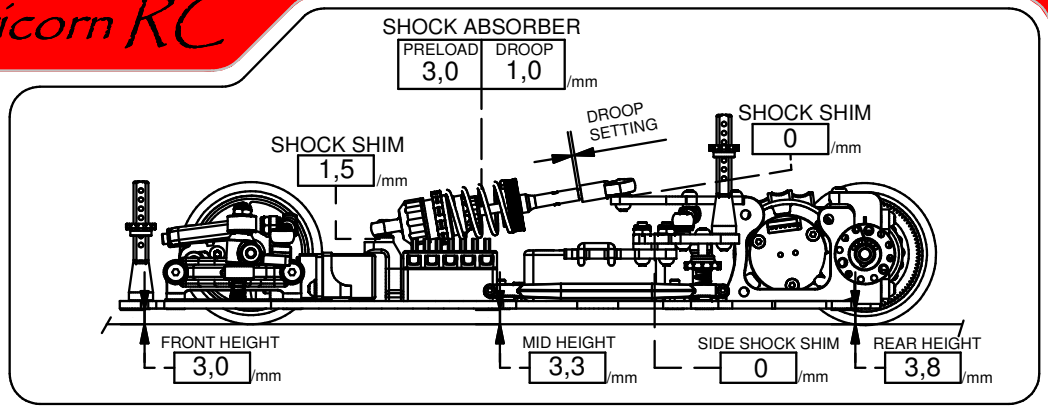

TRACK SURFACE		● CARPET	ASPHALT
TRACK LAYOUT	TECHNICAL	● MIXED	FAST
TRACTION	LOW	● MEDIUM	HIGH

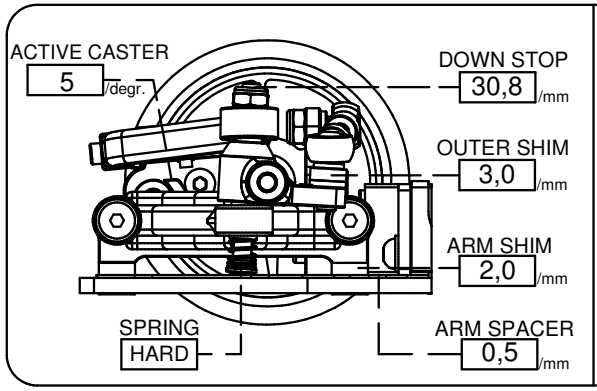

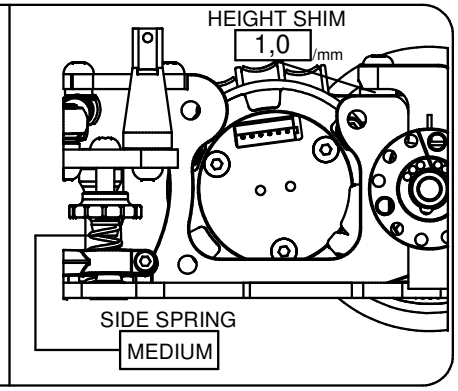

CENTER SHOCK ABSORBER

ORANGE	8	1.500 /CST	50 /%
SPRING	HOLE	OIL	REBOUND

SIDE SHOCK

30.000 /CST
OIL

TIRES

FRONT		REAR
	BRAND	
	SHORE	
43	DIAMETER	45
165	TRACK WIDTH	167

ADDITIVE TREATED AREA

DIFF. SETTING: ☐ ☐ ☐ ● ☐
LOOSE — MEDIUM — TIGHT

GEARING

	90 /T	
PINION	SPUR GEAR	DRIVE RATIO

MOTOR	4,5 T
ESC	
BATTERY	Li-Po 3,7V 1S
BODY	

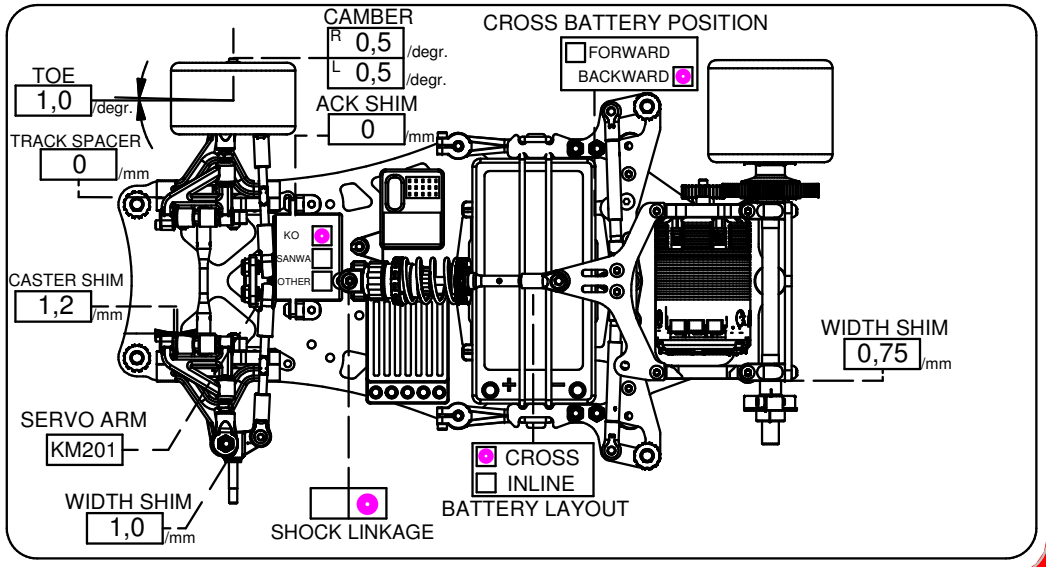

- NOTES -

Made in Italy

P12 BLANK SET-UP SHEET

Capricorn RC

RACE		DATE	
TRACK		QUALIFING POSITION	
NAME		BEST LAP	/sec
CITY/ COUNTRY		RACE POSITION	
CONTACT		RACE LENGTH	/min

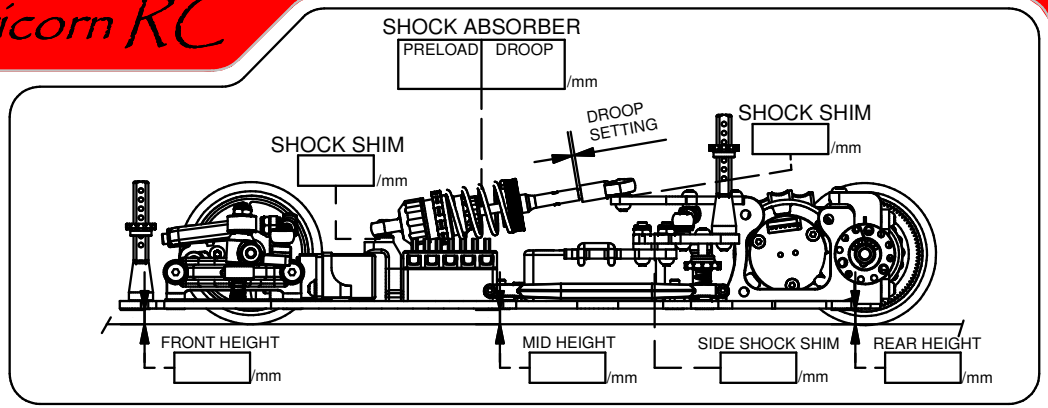

TRACK SURFACE		CARPET	ASPHALT
TRACK LAYOUT	TECHNICAL	MIXED	FAST
TRACTION	LOW	MEDIUM	HIGH

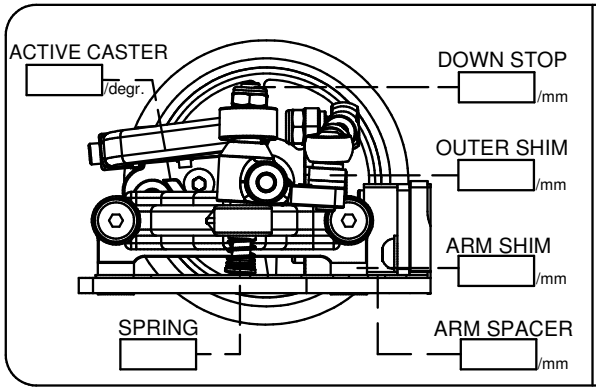

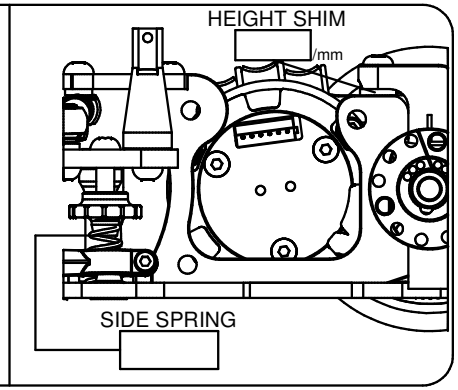

CENTER SHOCK ABSORBER

SPRING	HOLE	OIL	REBOUND
		/CST	/%

SIDE SHOCK

OIL
/CST

TIRES

FRONT		REAR
	BRAND	
	SHORE	
	DIAMETER	
	TRACK WIDTH	

ADDITIVE TREATED AREA

DIFF. SETTING

LOOSE — MEDIUM — TIGHT

GEARING

PINION	SPUR GEAR	DRIVE RATIO
/T	/T	

MOTOR	
ESC	
BATTERY	
BODY	

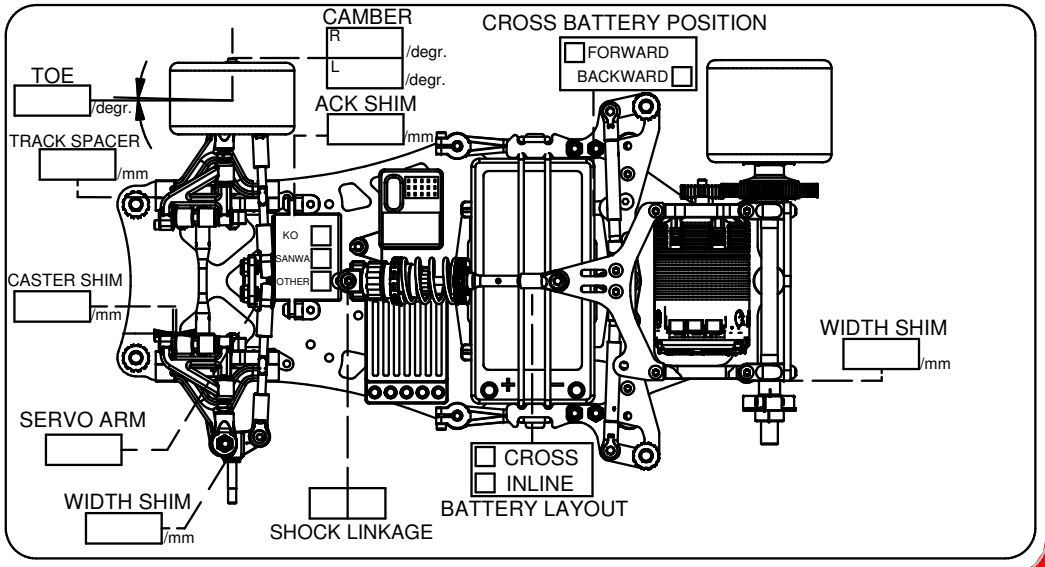

- NOTES -

Made in Italy

- Shocks & axle exploded -

Capricorn RC

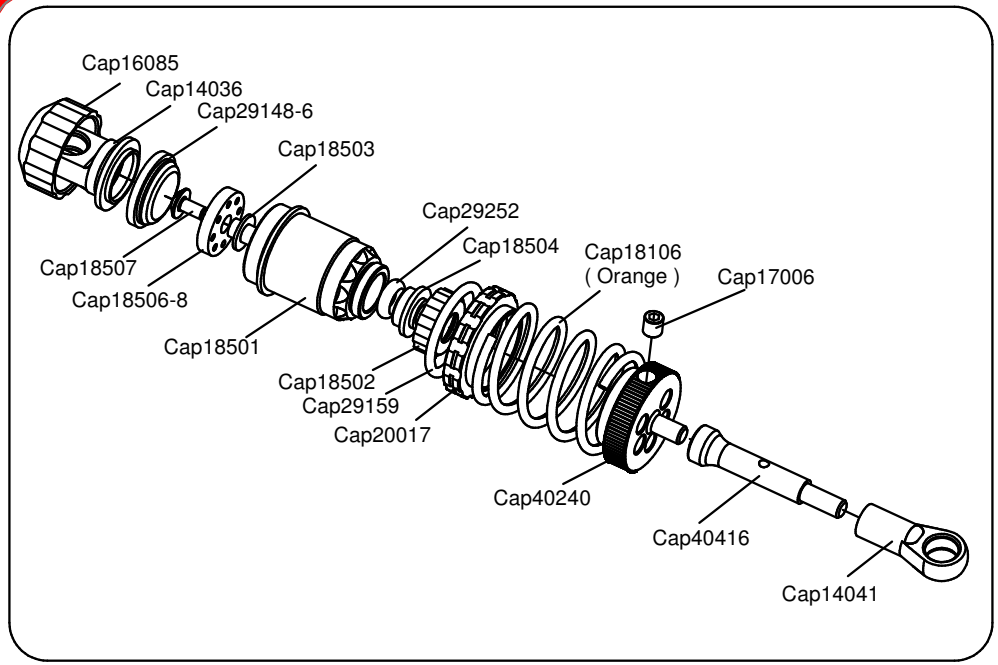

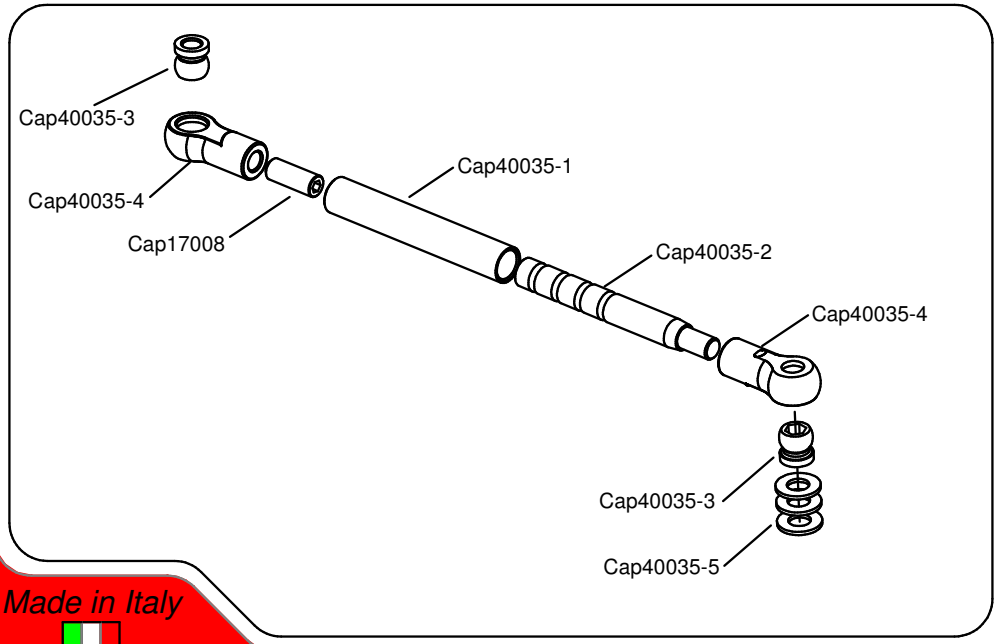

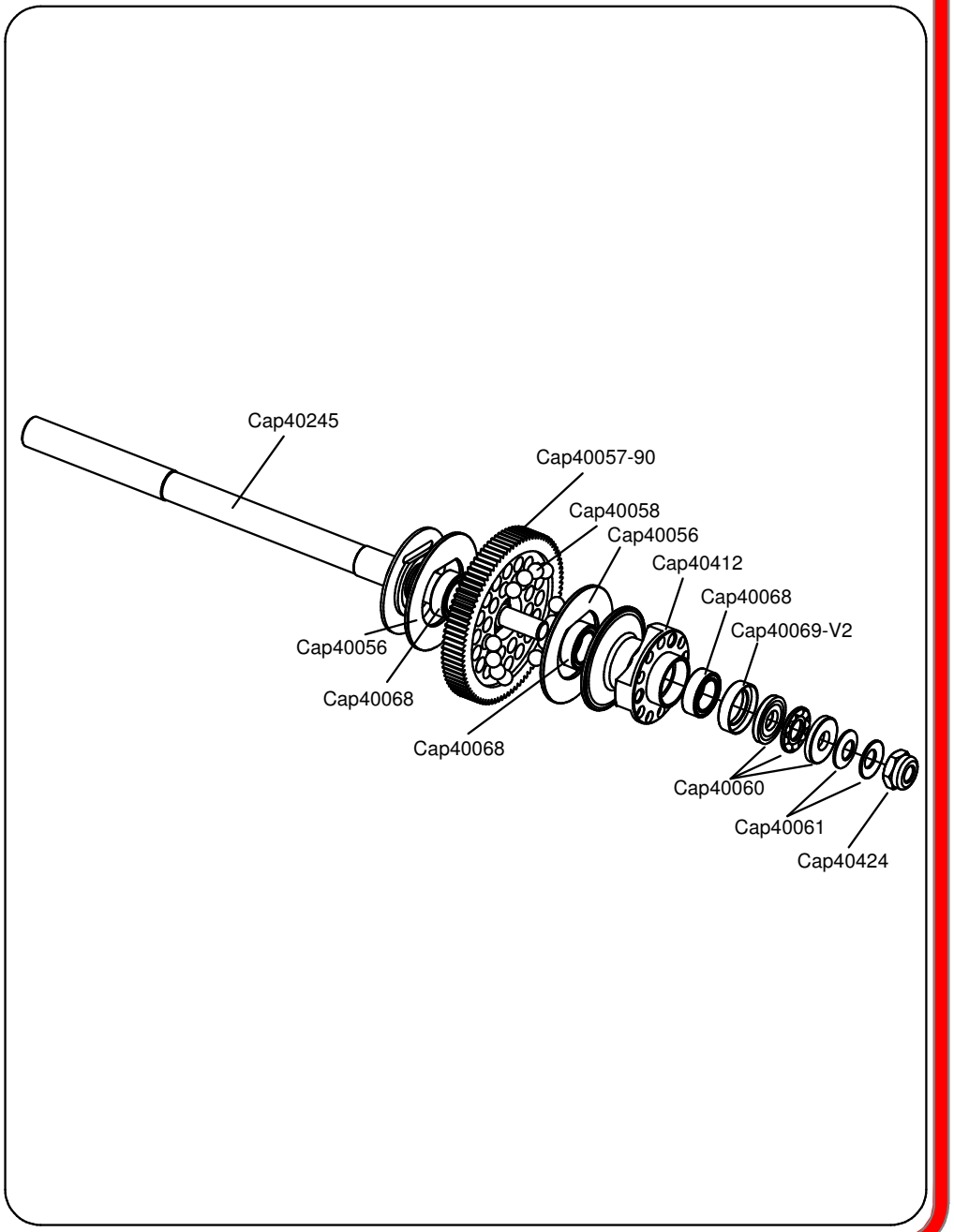

Made in Italy

- Front exploded -

Capricorn RC

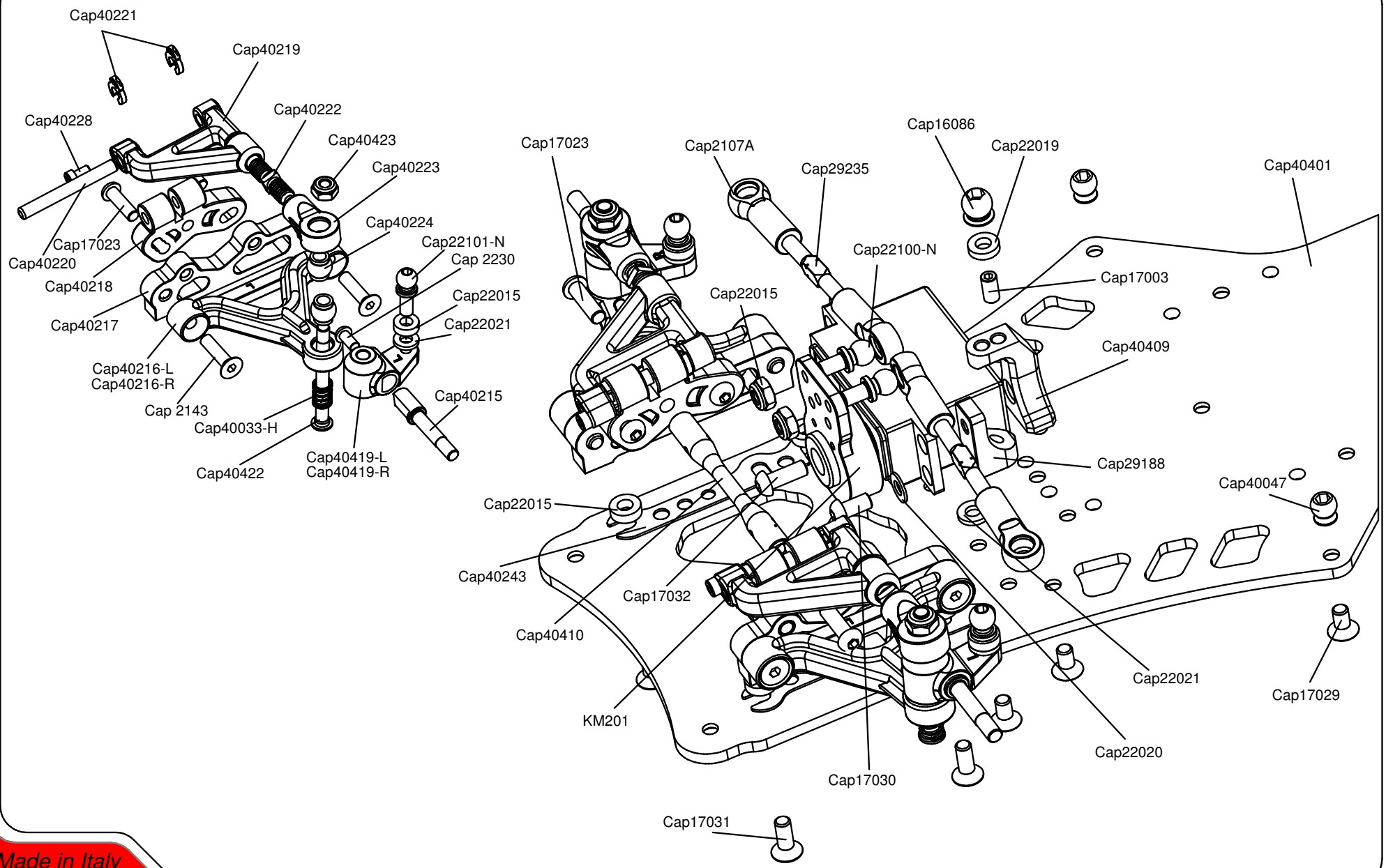

Made in Italy

- Center & bodymount - exploded

Capricorn RC

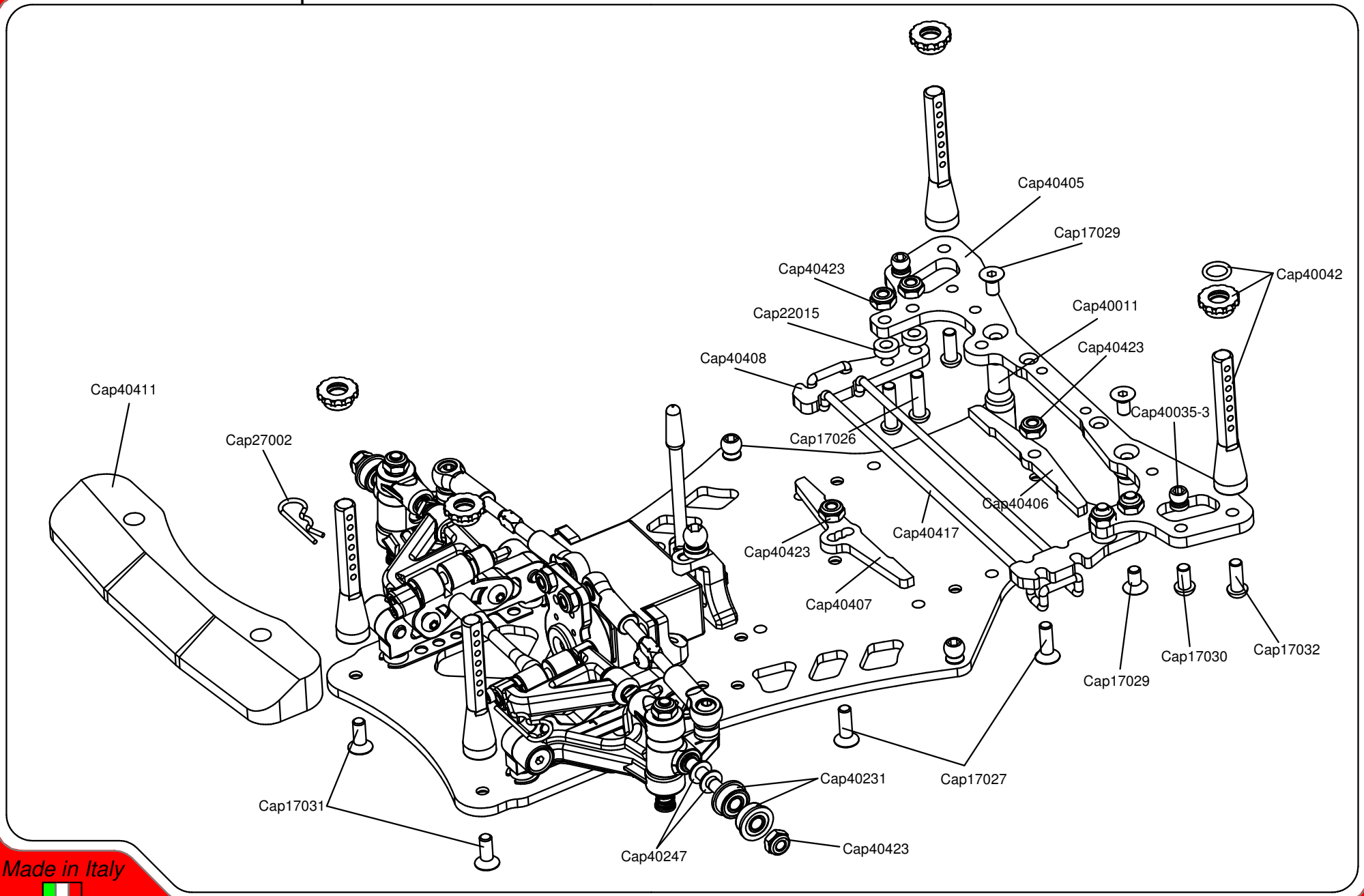

Made in Italy

- Rear exploded -

Capricorn RC

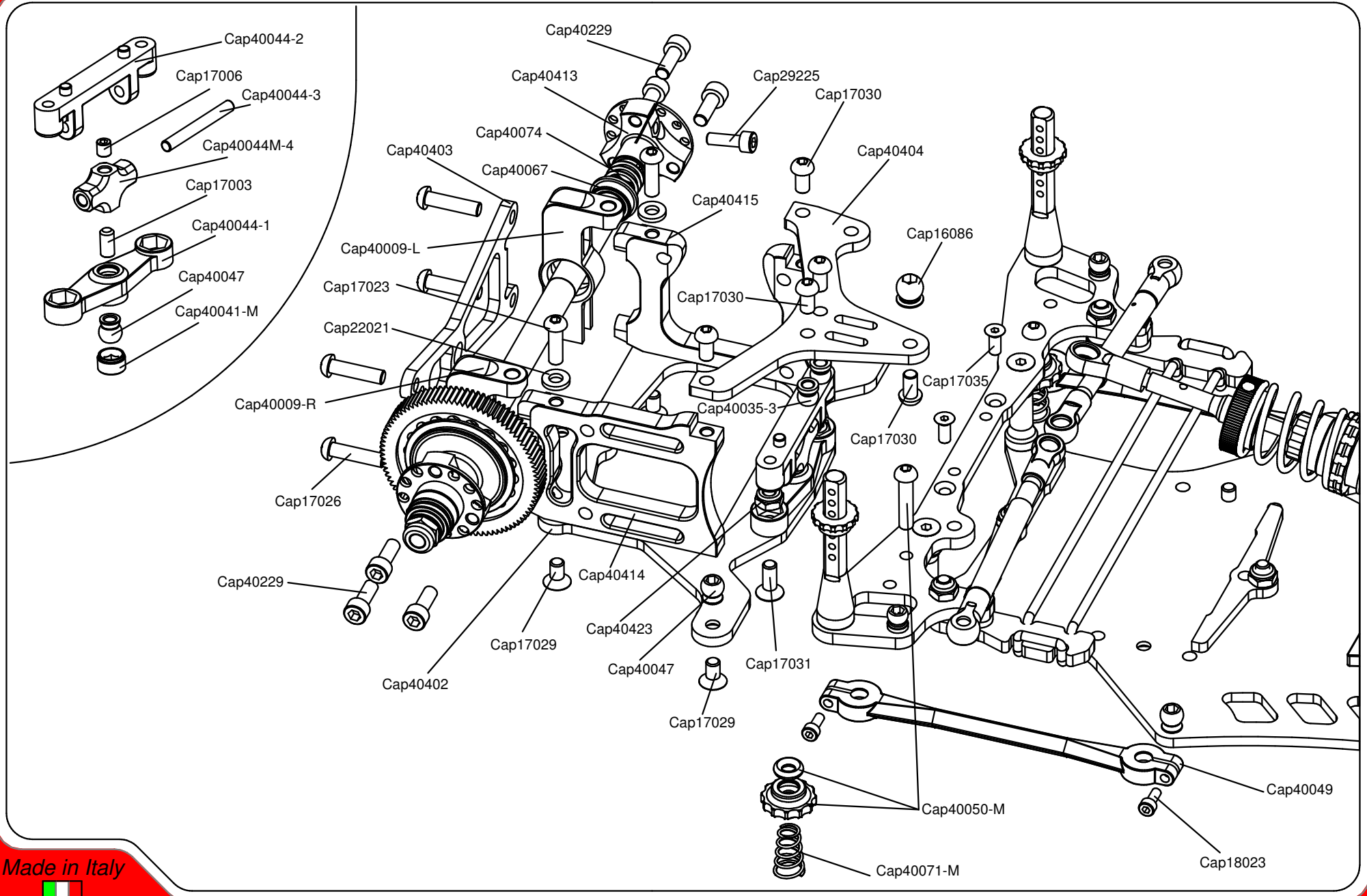

Made in Italy

- Option Parts -

Capricorn RC

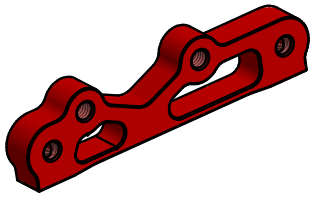

cod. Cap40217-M

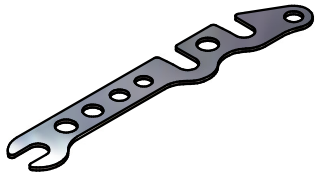

cod. Cap40243

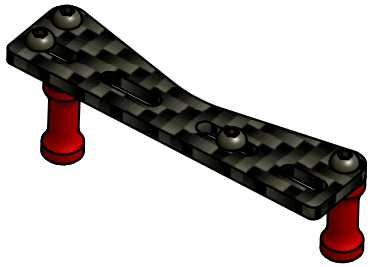

cod. Cap40420-K

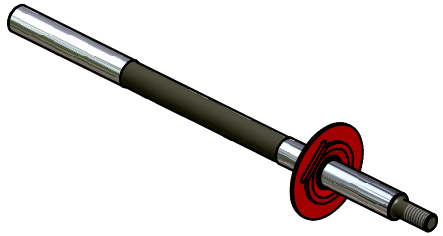

cod. Cap40079

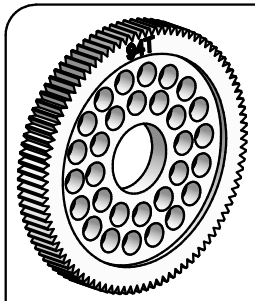

cod. Cap40057-94

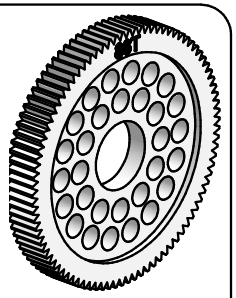

cod. Cap40057-86

cod. Cap18141

SOFT MEDIUM

2x 2x

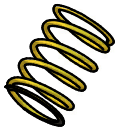

cod. Cap40033-S cod. Cap40033-M

SOFT HARD

2x 2x

cod. Cap40071-S cod. Cap40071-H

SOFT

0,22		Cap29176
0,24		Cap29175
0,25		Cap18106
0,26		Cap29174
0,27		Cap18107

HARD

M3x8 Aluminium screw (smaller head) suitable for rear inches sizes wheel

cod. Cap40248

M3 Aluminium screws

M3x4mm	cod. Cap29266
M3x5mm	cod. Cap29267
M3x6mm	cod. Cap29268
M3x8mm	cod. Cap29269
M3x10mm	cod. Cap29270
M3x12mm	cod. Cap29271
M3x14mm	cod. Cap29272
M3x16mm	cod. Cap29273

Made in Italy

Step 6.0

- Evo conversion -

Capricorn RC

L/R

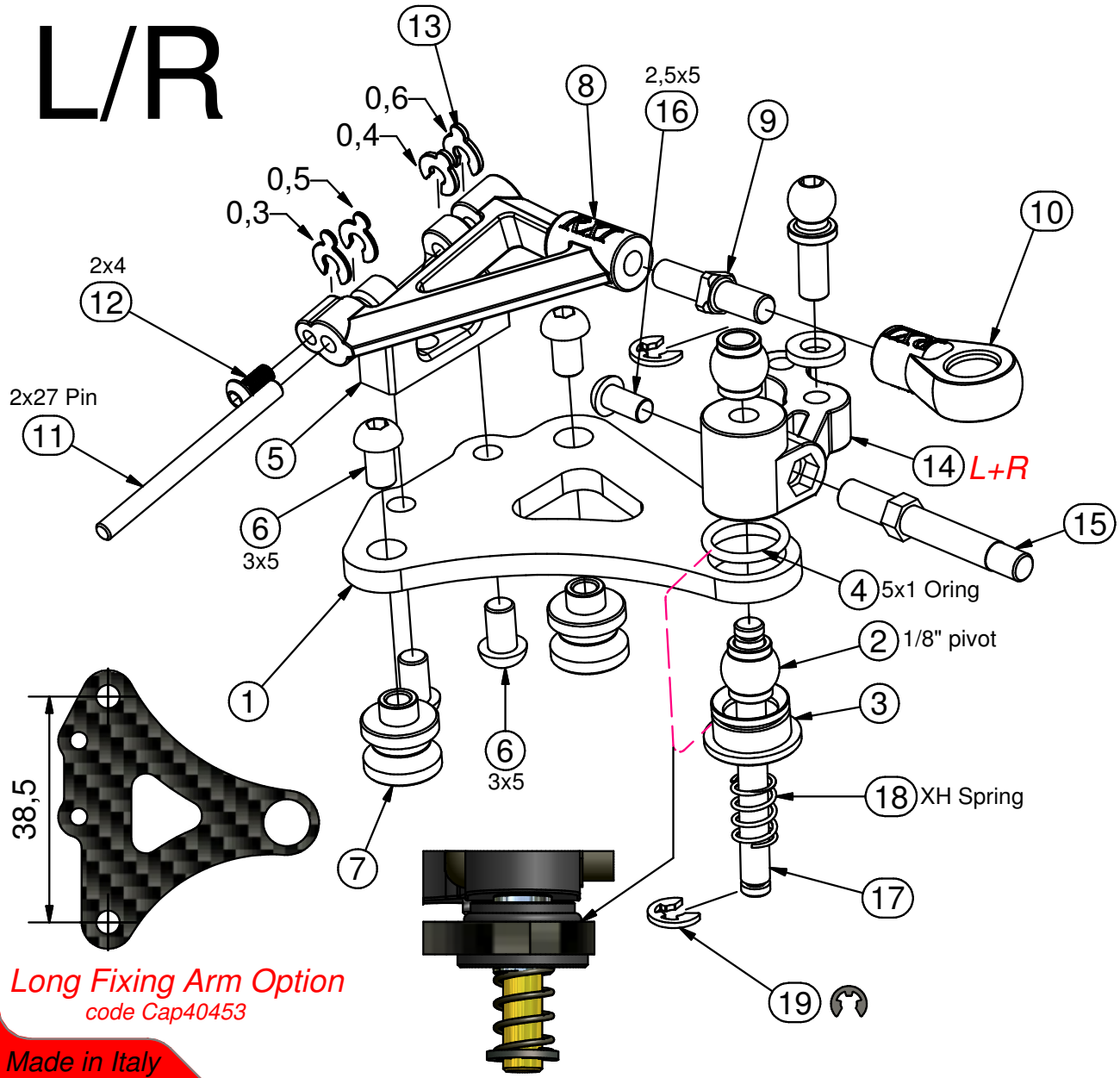

Long Fixing Arm Option
code Cap40453

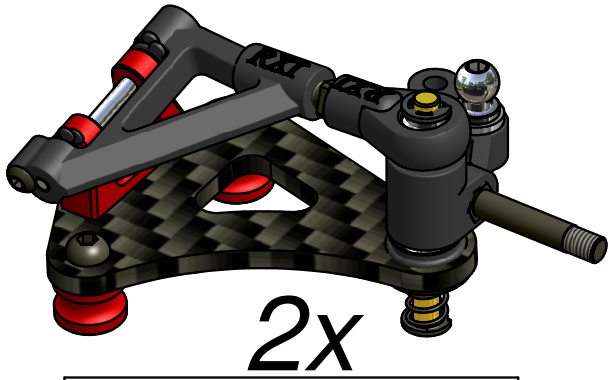

Parts List		
Rif.	n°	Code
1	1	Cap40452
2	2	Cap40468
3	1	Cap40113
4	1	Cap40111
5	1	Cap40455
6	4	Cap 2235
7	2	Cap40454
8	1	Cap40460
9	1	Cap40463
10	1	Cap40461
11	1	Cap40456
12	1	Cap40467
13	2	Cap40464
14	1	Cap40458-K
15	1	Cap40457
16	1	Cap 2230
17	1	Cap40462
18	1	Cap40431
19	2	Cap17001

Made in Italy

Step 6.1

- Evo conversion -

Capricorn RC

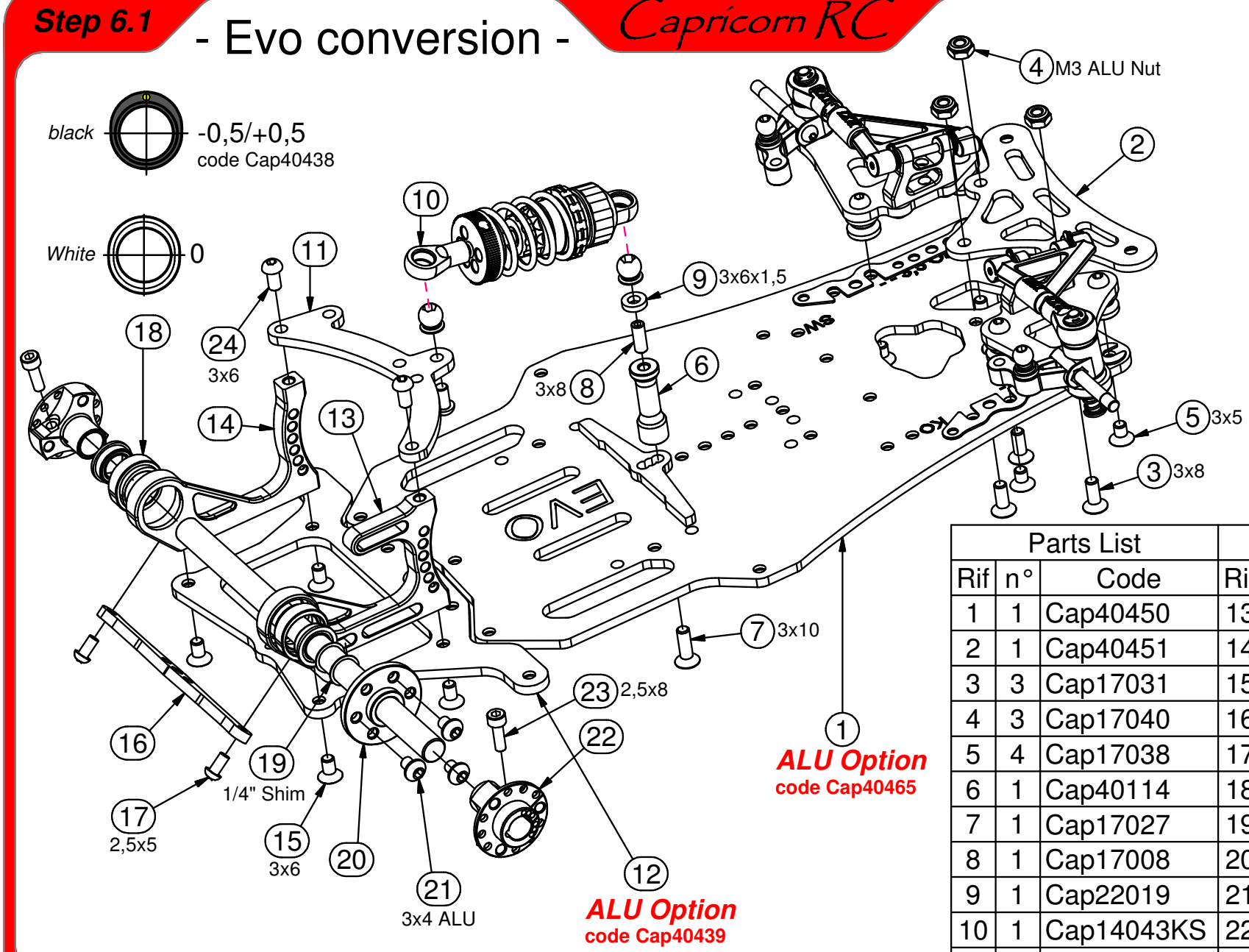

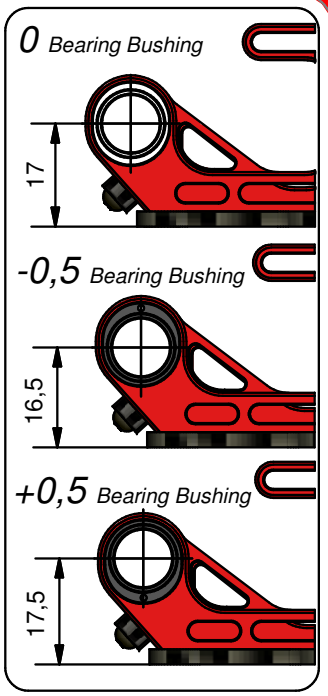

Parts List			Parts List		
Rif	n°	Code	Rif	n°	Code
1	1	Cap40450	13	1	Cap40434
2	1	Cap40451	14	1	Cap40435
3	3	Cap17031	15	4	Cap17029
4	3	Cap17040	16	1	Cap40436
5	4	Cap17038	17	2	Cap 2230
6	1	Cap40114	18	2	Cap40437
7	1	Cap17027	19	2	Cap40074
8	1	Cap17008	20	1	Cap40466
9	1	Cap22019	21	3	Cap29266
10	1	Cap14043KS	22	1	Cap40413
11	1	Cap40448	23	1	Cap17036
12	1	Cap40433	24	3	Cap17030

Made in Italy

- Additional Notes -

Capricorn RC

Made in Italy