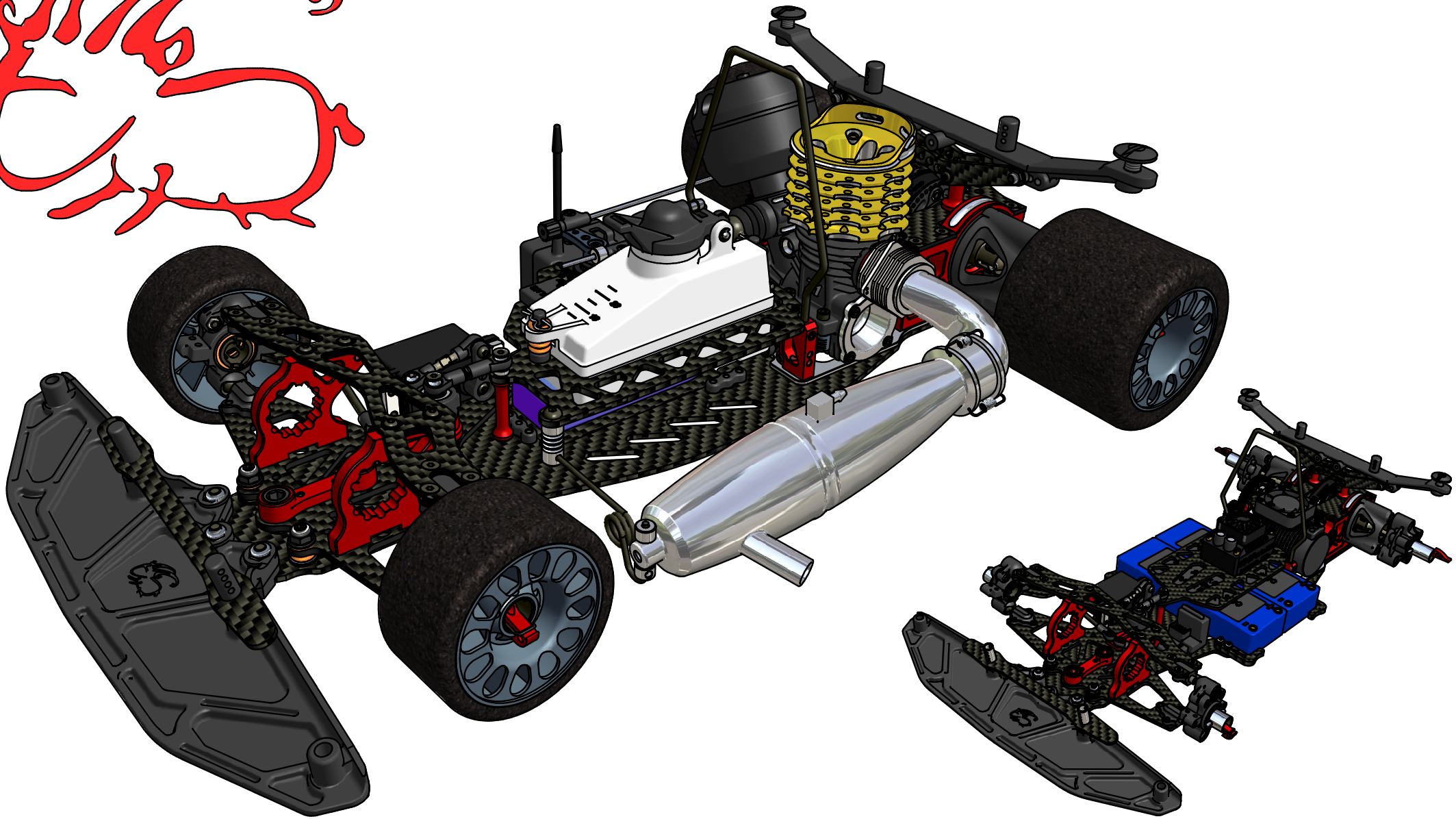

LabC8-CL RACE GP-EP Instruction Manual rel 1.0 (11/22)

- Symbols -

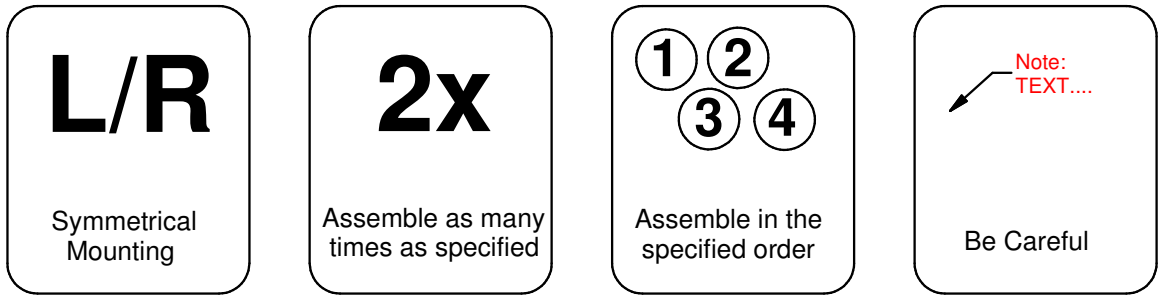

WARNING

This radio control model is not toy.
First time builders should seek the advice of experienced modellers before beginning assembly and/or if they do not fully understand any part of the construction.We highly advise to read the instruction manual before assembly, and to always keep it at hand for reference. Take care before operating this model; you are responsible for its assembly and safe operation. The extreme performance of this model could be understimated by inexpert drivers and could damage objects and/or people. Assembly this kit only in places out of children's reach!
CAPRICORN RC is not responsible for any damage or harm caused by improper use or assembly.
CAPRICORN RC and its distribution network are not responsible for any damage caused by shipping or handling.
Eventual parts missing from the kit or flawed must be reported within two weeks of purchase to your local hobby shop or distributor. For best performance, we highly advise to only use original authentic CAPRICORN RC parts.
For customer support and service please contact your local hobby shop or agent from whom you purchased this item.
Contents of box may slightly differ from the pictures shown. Construction tools, body, fuel, radio system and servo, engine, muffler and battery pack are NOT INCLUDED unless otherwise stated.

- Tools & Equipment -

Tools needed for assembly (NOT INCLUDED)

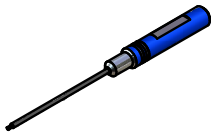
Hex Wrench 1,5/2/2,5/3mm

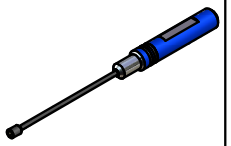
Box Wrench 7mm

Reamer

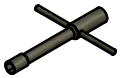
Wrench Glowplug & Cluthnut

Cutter

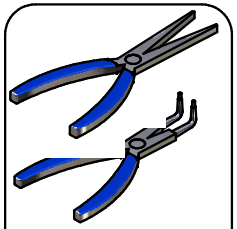
Pliers

Adjustable Pliers

Glass or Vinyl Tape

Parts for model completion and Start (NOT INCLUDED)

Engine

Air Filter & Oil

Exhaust System

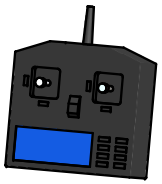
Transmitter

Receiver

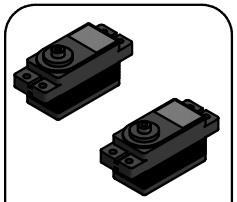
Steering & Throttle Low Profile Servos

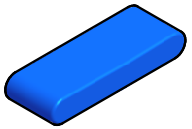
RX Battery Pack

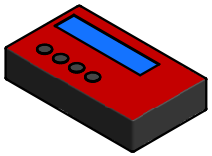
Battery Charger

Also required: Starting Box - Nitro fuel - Fuel bottle - Glower - Plycarbonat body

Made in Italy

Step 1.0

- Front Assembly - BAG 1

Capricorn RC

Parts List		
Rif.	n°	Code
1	1	Cap 2520
2	1	Cap 2518
3	2	Cap 2522
4	2	Cap16026S
5	2	Cap 2516
6	2	Cap 2511
7	14	Cap17029
8	2	Cap40083
9	1	Cap16055
10	1	Cap16014
11	1	Cap18093
12	1	Cap 2434
13	1	Cap16033
14	1	Cap16028
15	1	Cap171015
16	3	Cap17030
17	3	Cap18169
18	2	Cap16019
19	2	Cap 2116
20	4	Cap14041KS
21	1	Cap 2720

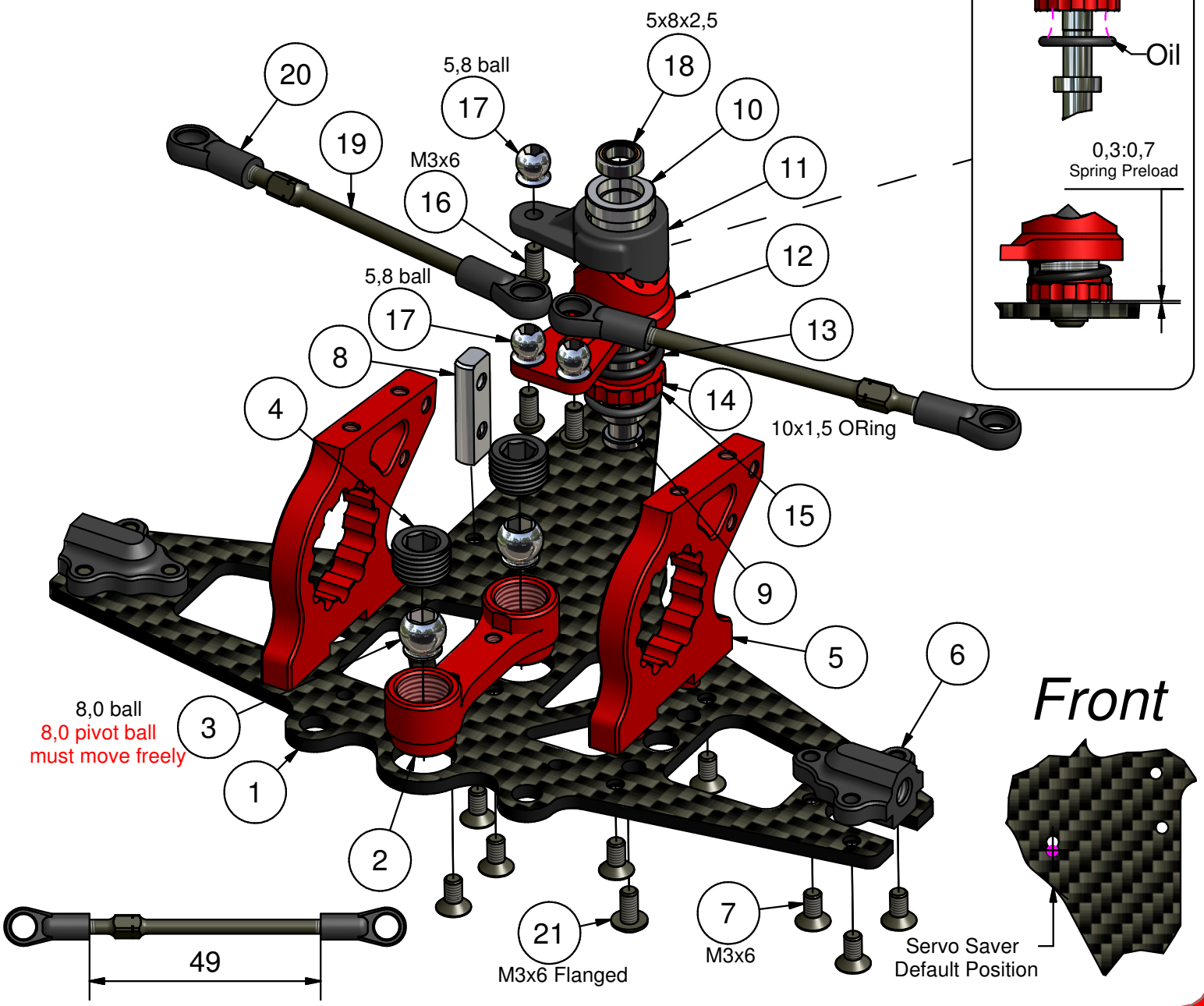

Made in Italy

Step 1.1

- Front Assembly - BAG 1

Capricorn RC

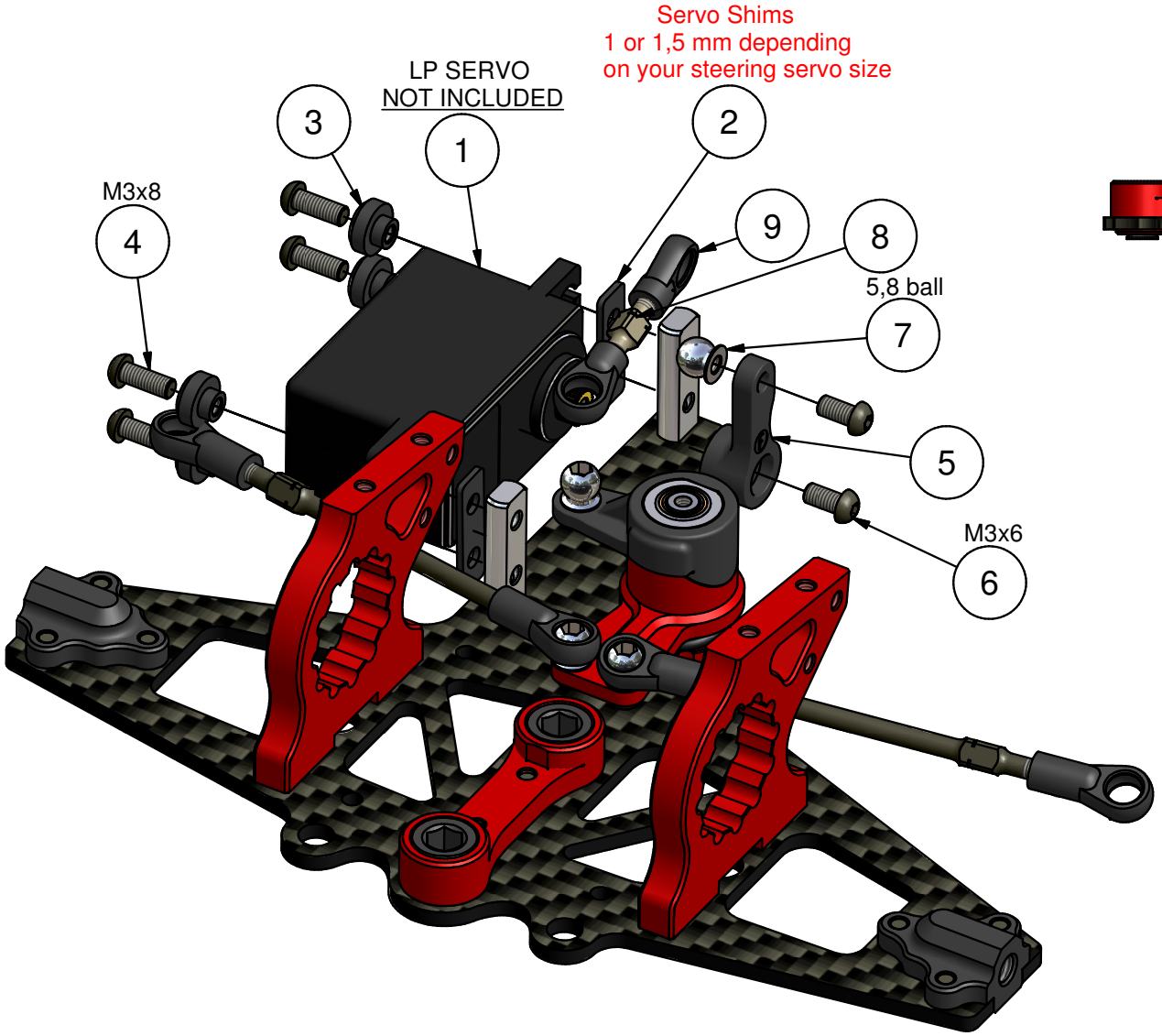

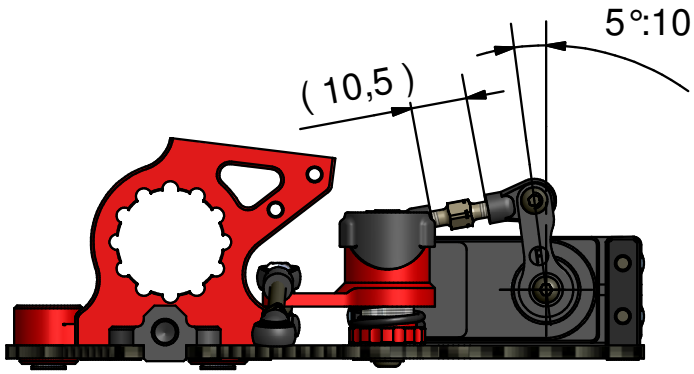

Parts List		
Rif.	n°	Code
1	1	Servo
2	2	Cap17041
3	4	Cap18086
4	4	Cap17032
5	1	Cap 601
6	5	Cap17030
7	4	Cap18169
8	1	Cap 2152B
9	2	Cap14042KS

Made in Italy

Step 1.2

- Front Assembly - BAG 1

Capricorn RC

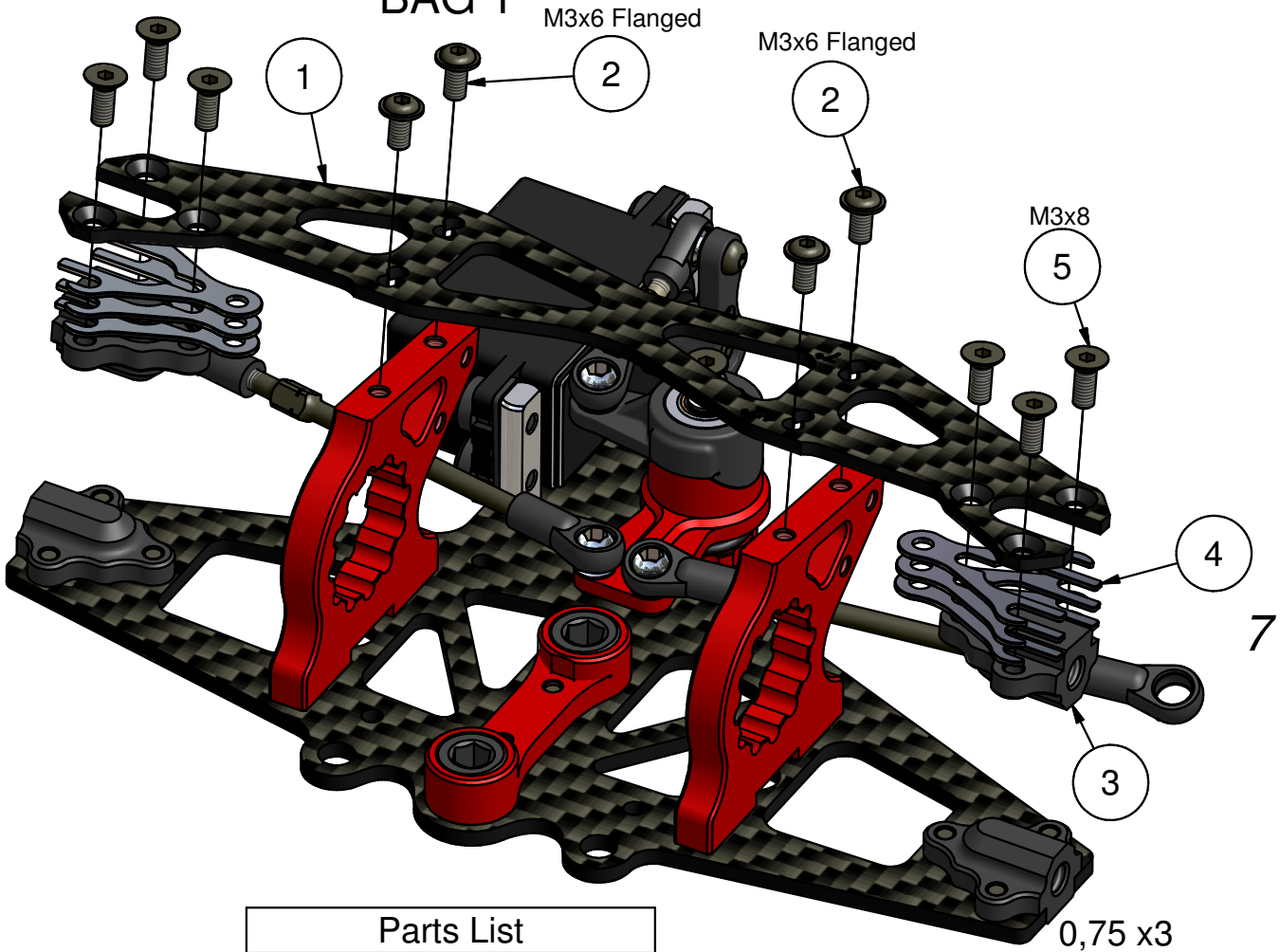

12° Caster Angle (14° Option)

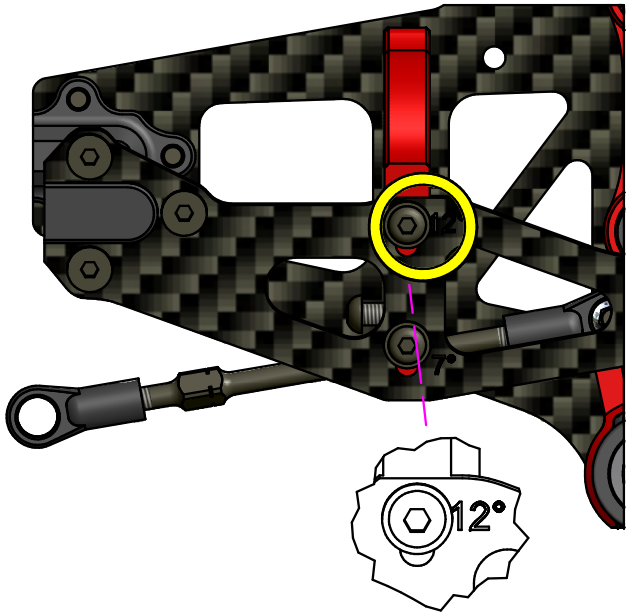

7° Caster Angle (9° Option)

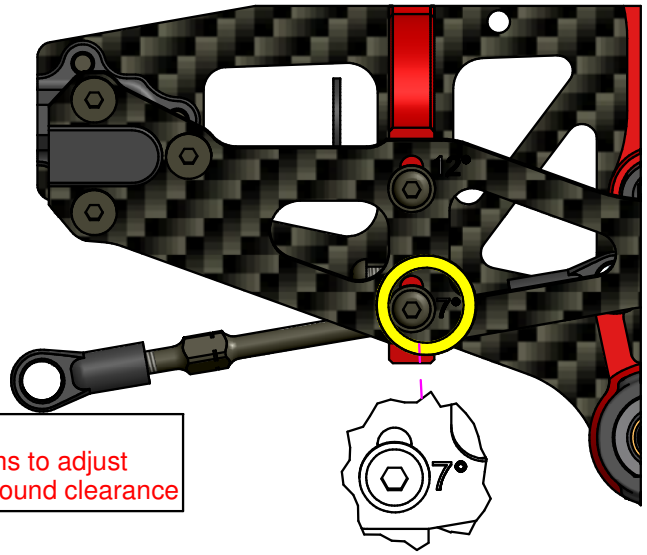

Parts List		
Rif.	n°	Code
1	1	Cap 2540B
2	4	Cap 2720
3	2	Cap 2511
4	6	Cap 2566
5	6	Cap17031

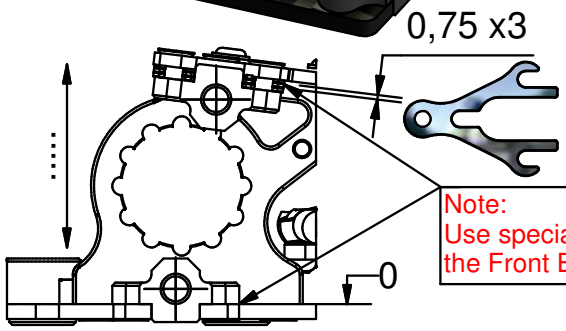

Note:
Use special shims to adjust
the Front End ground clearance

Made in Italy

Step 2.0

- Front Assembly - BAG 2

Capricorn RC

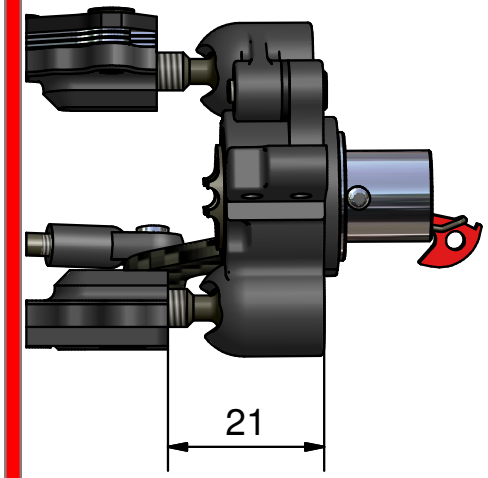

Parts List			Parts List			Parts List		
Rif.	n°	Code	Rif.	n°	Code	Rif.	n°	Code
1	2	Cap 2733	7	2	Cap 2717	13	4	Cap17032
2	4	Cap 2736-1.0	8	2	Cap 2159-1.0	14	2	Cap18169
3	2	Cap 2734	9	2	Cap 2064-B	15	2	Cap17030
4	4	Cap18025	10	2	Cap 2069	16	4	Cap16004S
5	4	Cap17040	11	2	Cap17006	17	4	Cap 2746
6	4	Cap 2012	12	2	Cap 2735	18	2	Cap 2139

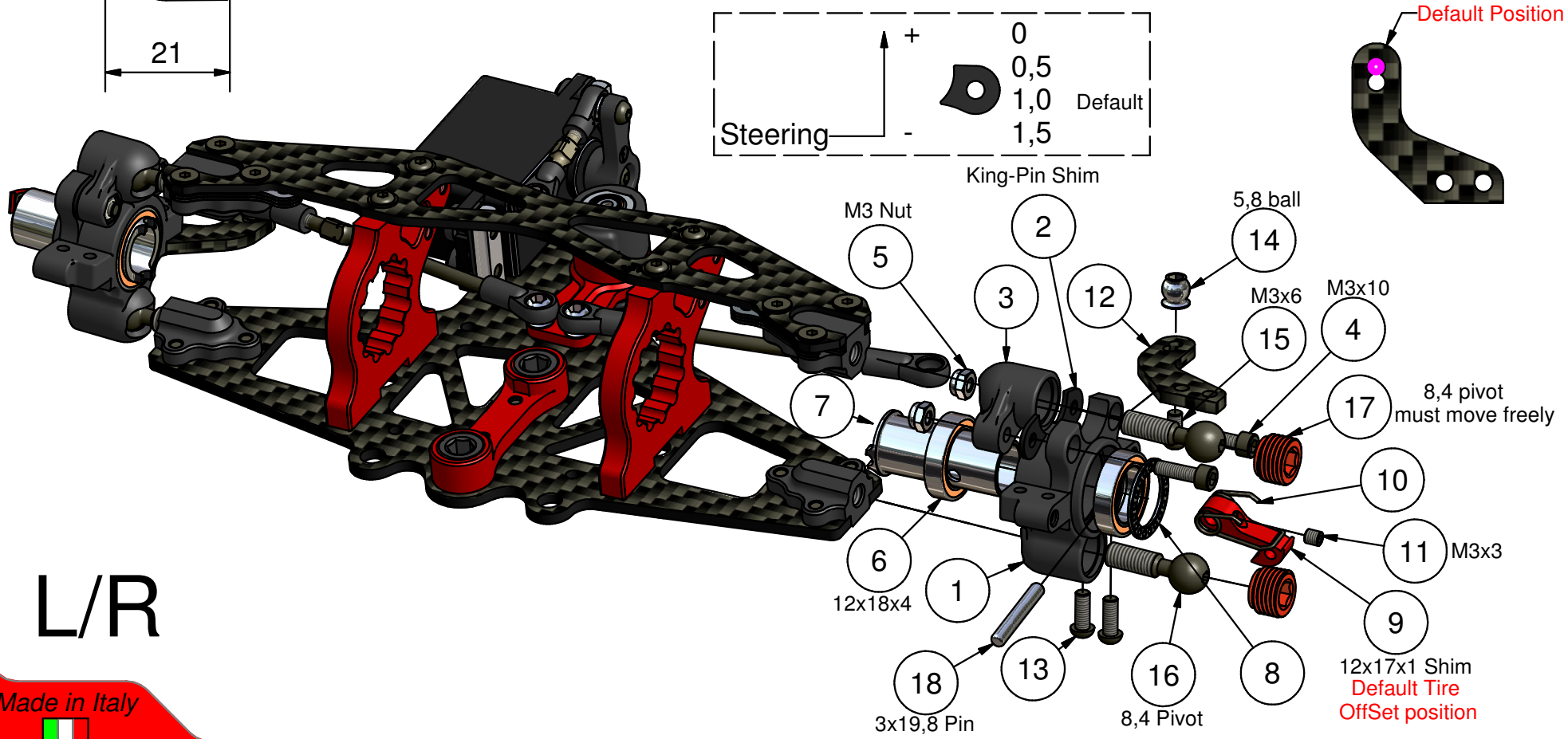

L/R

Made in Italy

Step 2.1 - Front / Central Assembly - BAG 2

Capricorn RC

Rif.	n°	Code	Rif.	n°	Code	Rif.	n°	Code
1	1	Cap 2702FG	10	4	Cap 3078	18	2	Cap 2048-P
2	1	Cap40115	11	4	Cap170520	19	2	Cap 2397
3	1	Cap22021	12	2	Cap 3036-1.0	20	1	Cap 2560L
4	1	Cap17031	13	2	Cap 2721	21	1	Cap 2708
5	3	Cap16009	14	2	Cap 2548	22	2	Cap 2073
6	8	Cap17029	15	1	Cap 2458	23	2	Cap 2146
7	1	Cap15014P	16	3	Cap 2145	24	1	Cap 2104
8	3	Cap18158	17	3	Cap 2112	25	4	Cap 2235
9	2	Cap 2521						

Front End Rigidity Adjustment

HARD ◿ 13,0 ◿ SOFT

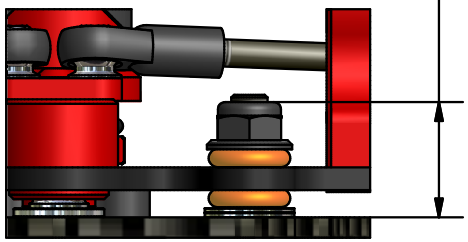

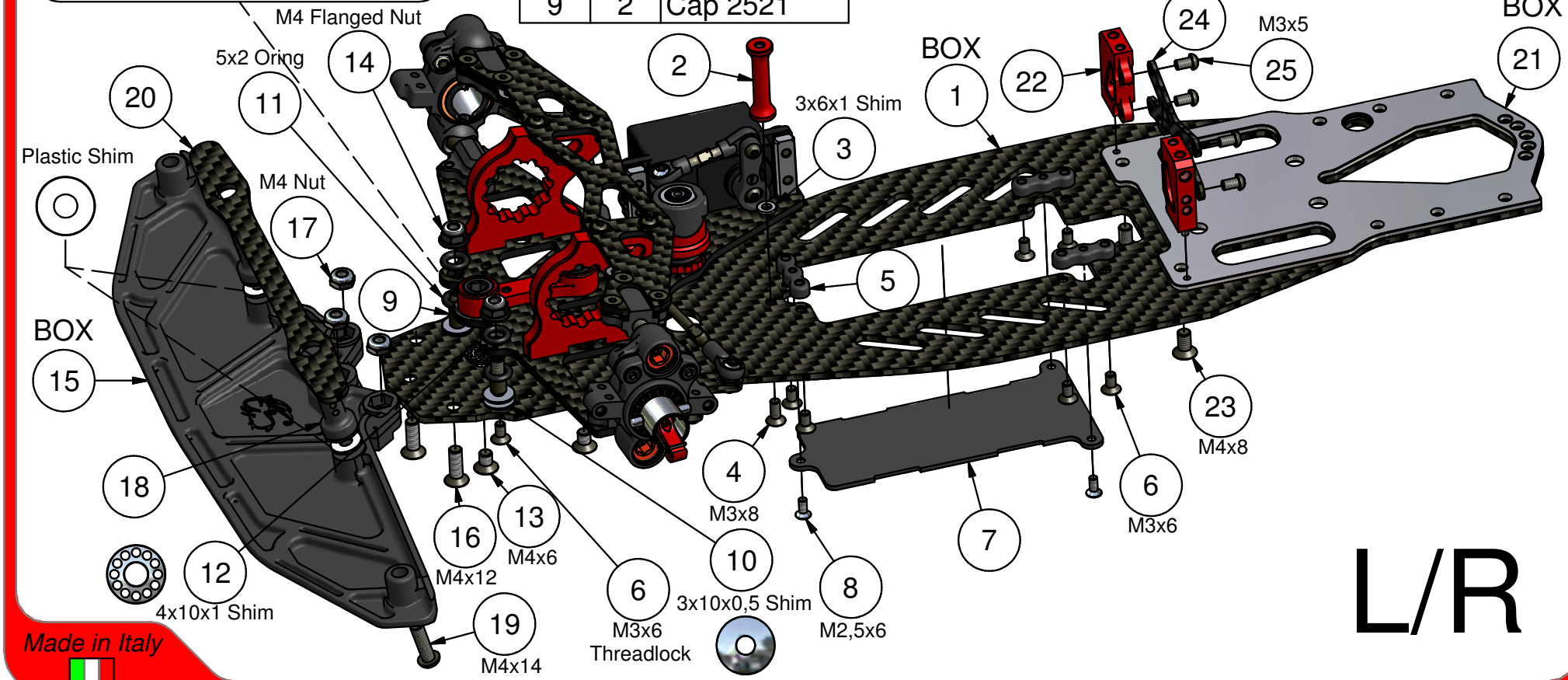

Made in Italy

Step 2.2 - Central Flex Assembly - BAG 2

Capricorn RC

Parts List			Parts List			Parts List		
Rif.	n°	Code	Rif.	n°	Code	Rif.	n°	Code
1	1	Cap 2105	5	4	Cap18169	9	1	Cap40463
2	2	Cap17010	6	4	Cap14042KS	10	1	Cap14043KS
3	4	Cap17030	7	2	Cap17008	11	2	Cap16086F
4	1	Cap 2067	8	1	Cap14041KS	12	1	Cap 2143

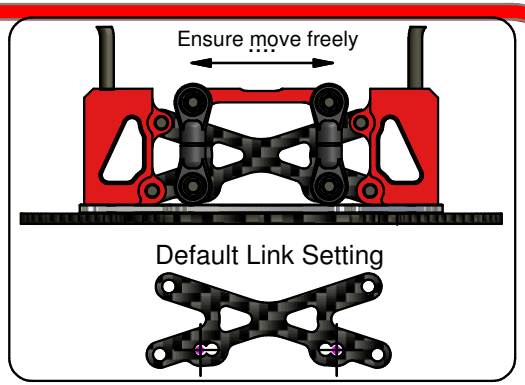

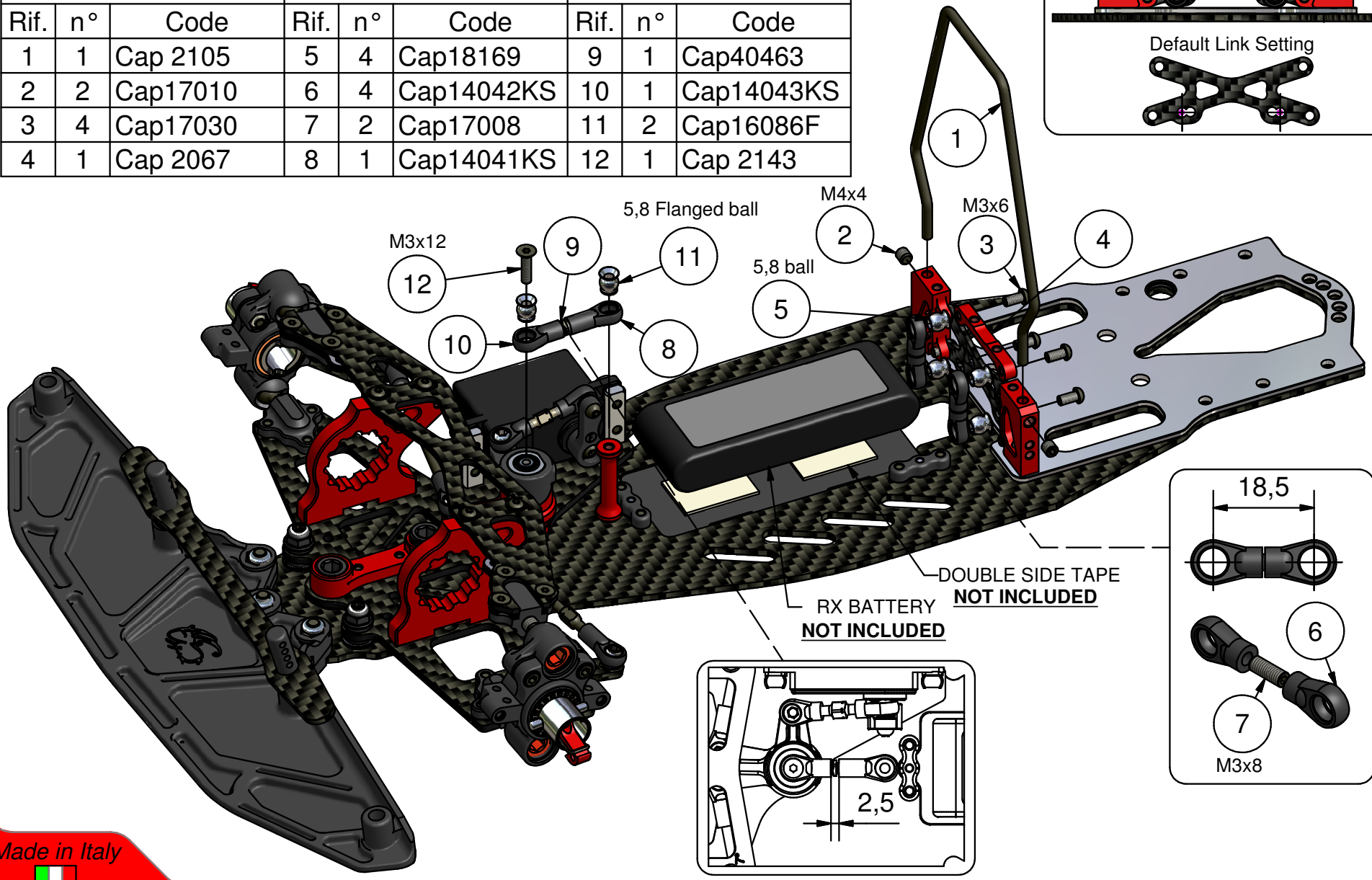

Made in Italy

Step 3.0 - Differential Assembly - BAG 3

Capricorn RC

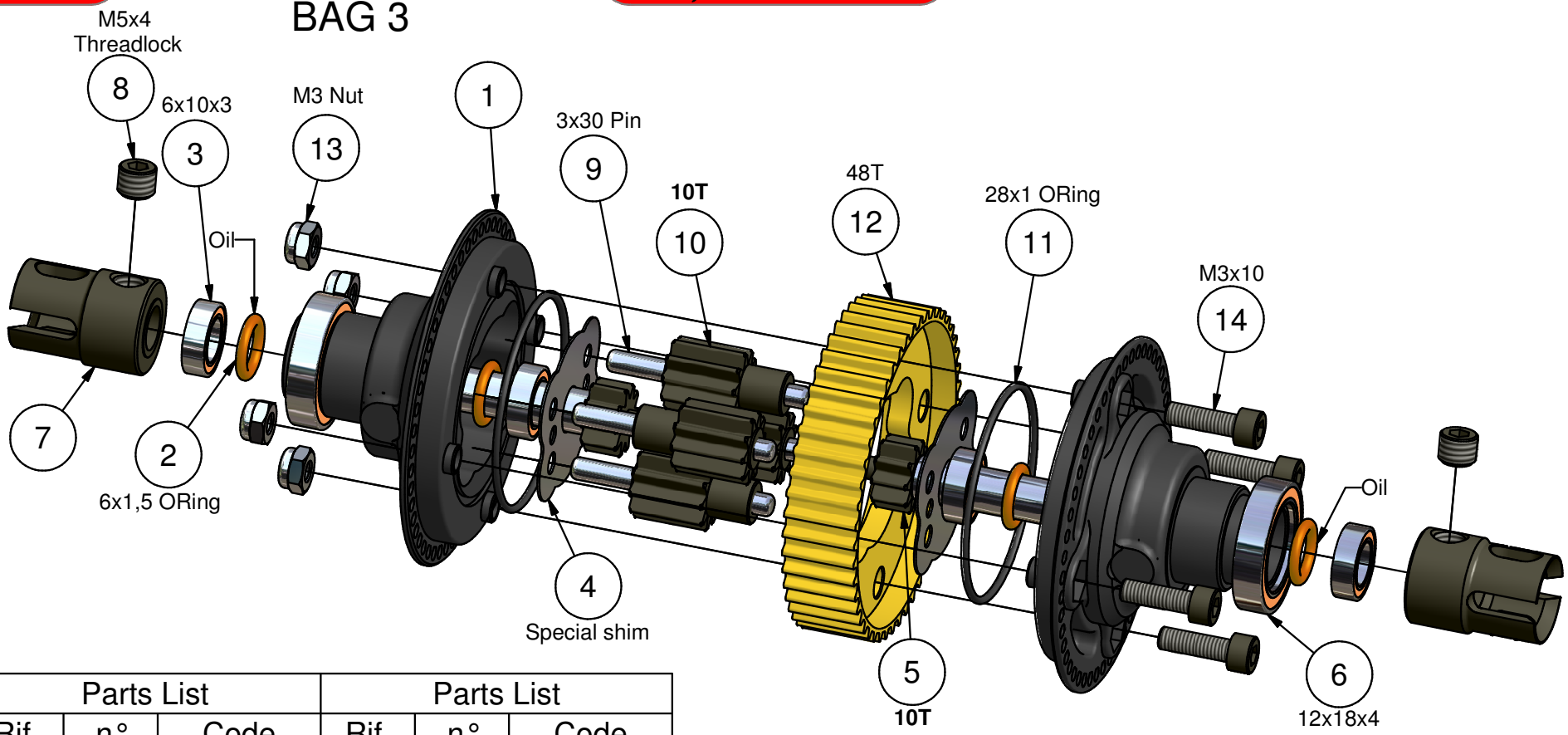

Parts List			Parts List		
Rif.	n°	Code	Rif.	n°	Code
1	2	Cap 2743	8	2	Cap 3112
2	4	Cap 2724	9	4	Cap18078
3	4	Cap16079	10	4	Cap 2727
4	2	Cap 2745	11	2	Cap 2728
5	2	Cap 2729	12	1	Cap 2744
6	2	Cap 2012	13	4	Cap17040
7	2	Cap 2710	14	4	Cap18025

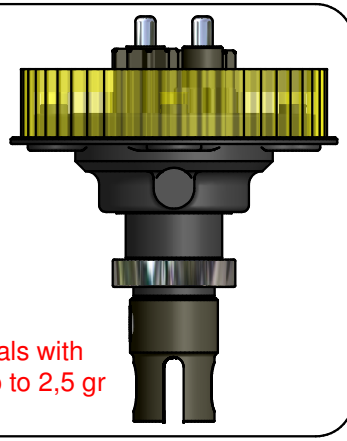

Note:
Fill the differentials with
70.000 cst oil up to 2,5 gr

Made in Italy

Step 3.1

- Rear Assembly - BAG 3

Capricorn RC

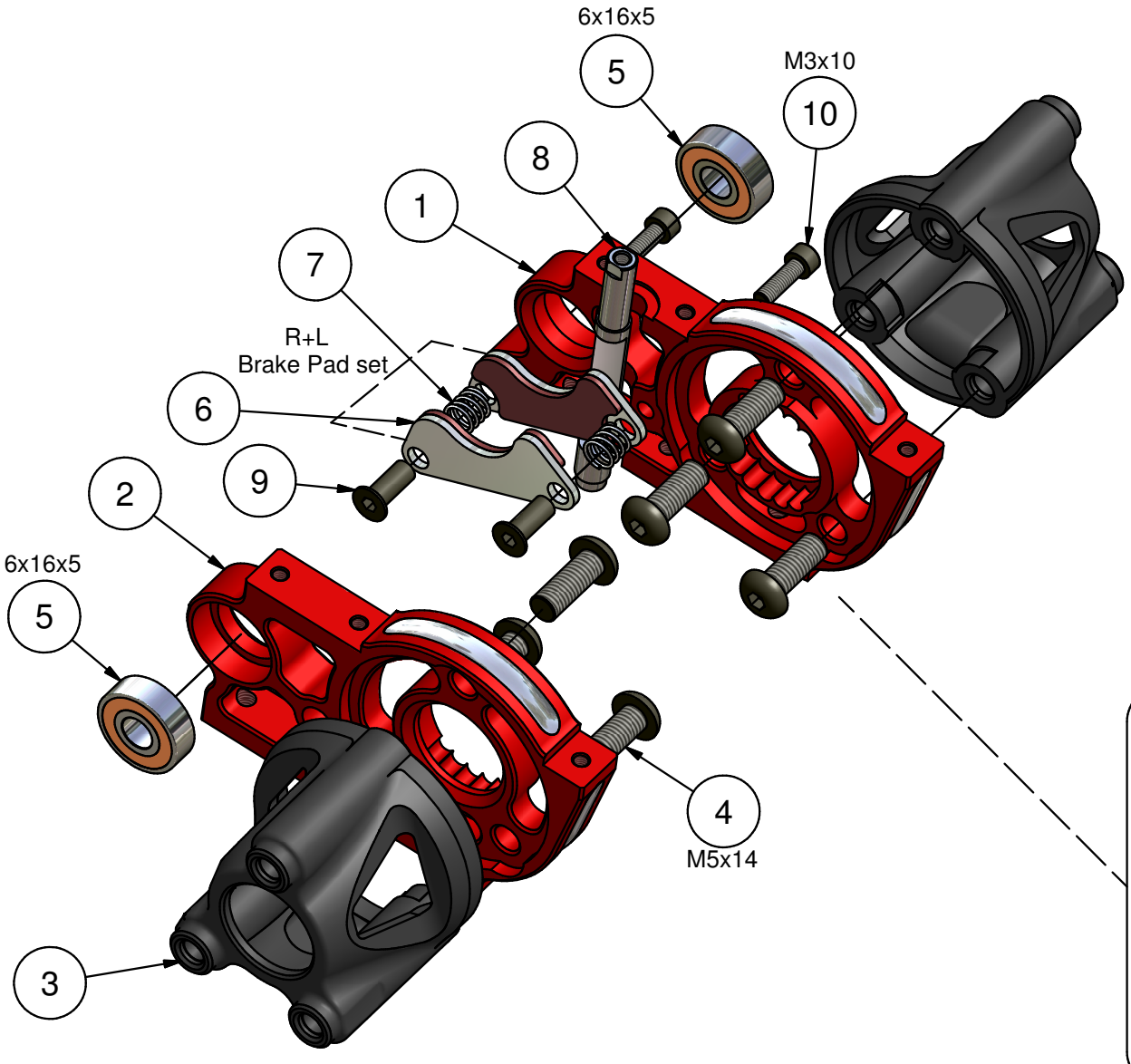

Parts List		
Rif.	n°	Code
1	1	Cap 2706
2	1	Cap 2707
3	2	Cap 2730
4	6	Cap 2719
5	2	Cap 2287
6	1	Cap 2063TF-K
7	2	Cap 2070
8	1	Cap 2043-V2
9	2	Cap 2038
10	2	Cap18025

Brake PAD Position

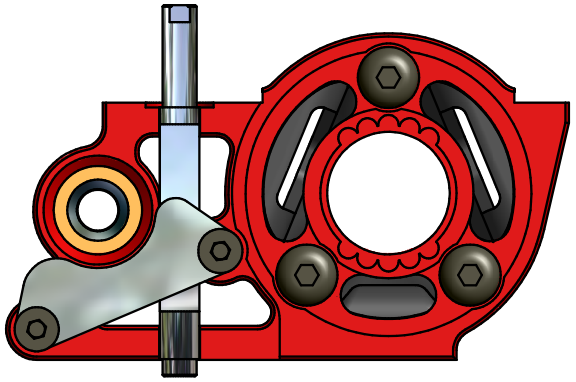

Made in Italy

Step 3.2 - Rear Assembly - BAG 3

Capricorn RC

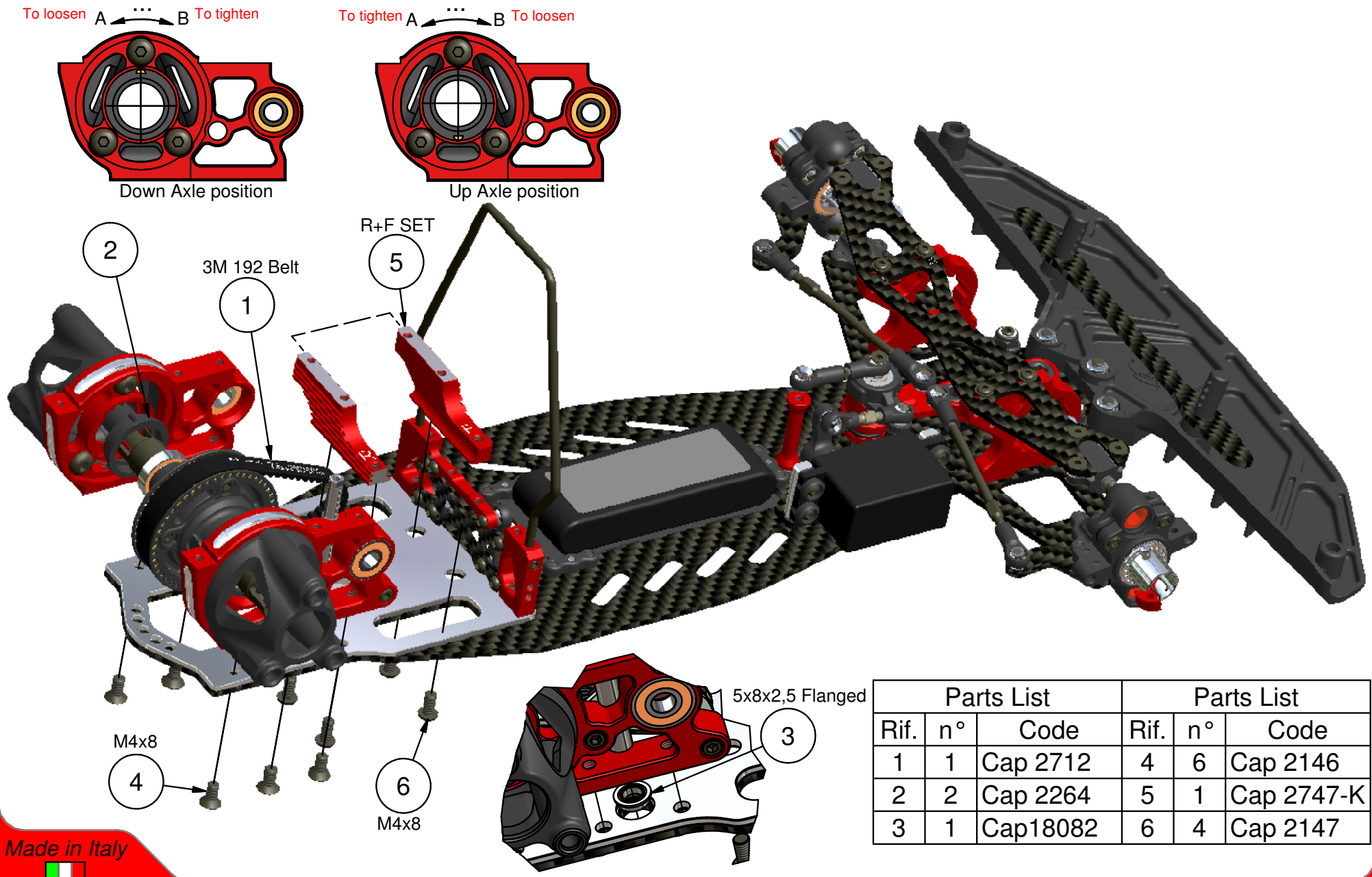

Parts List			Parts List		
Rif.	n°	Code	Rif.	n°	Code
1	1	Cap 2712	4	6	Cap 2146
2	2	Cap 2264	5	1	Cap 2747-K
3	1	Cap18082	6	4	Cap 2147

Made in Italy

Step 3.3

- Rear Assembly - BAG 3

Capricorn RC

Parts List		
Rif.	n°	Code
1	1	Cap 2715
2	1	Cap 2277
3	1	Cap 2275
4	1	Cap17010
5	1	Cap 2100
6	1	Cap 2006
7	1	Cap17002
8	1	Cap 2134
9	1	Cap 2713
10	1	Cap2051-58B
11	9	Cap17029
12	1	Cap 2714
13	1	Cap17031
14	1	Cap18082
15	2	Cap 2709
16	1	Cap 2704FG
17	2	Cap 2721
18	2	Cap 2705
19	4	Cap 2720

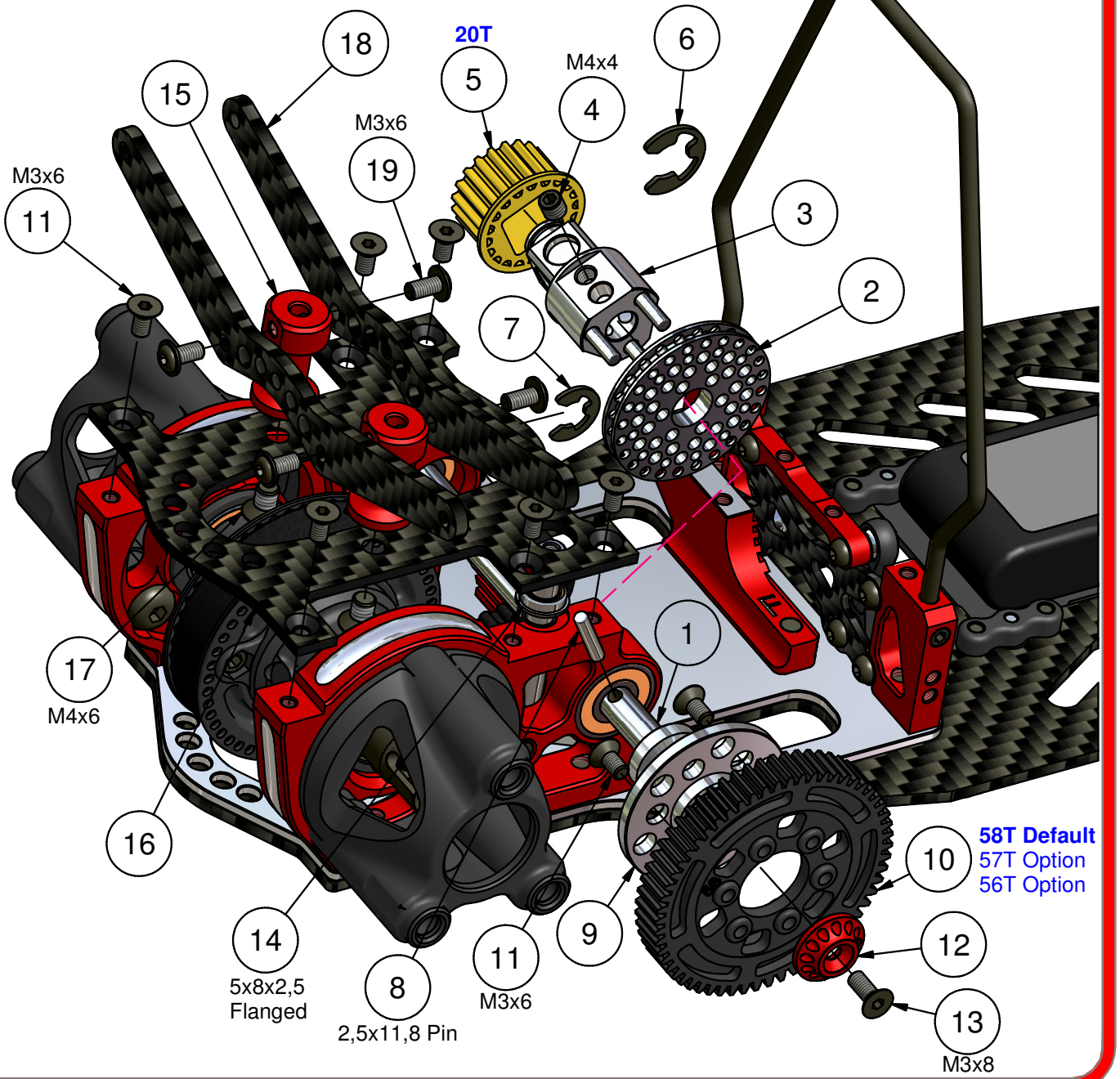

Made in Italy

Step 4.0 - Rear Hub Assembly - BAG 4

Capricorn RC

2x

Rear Chassis Height Position

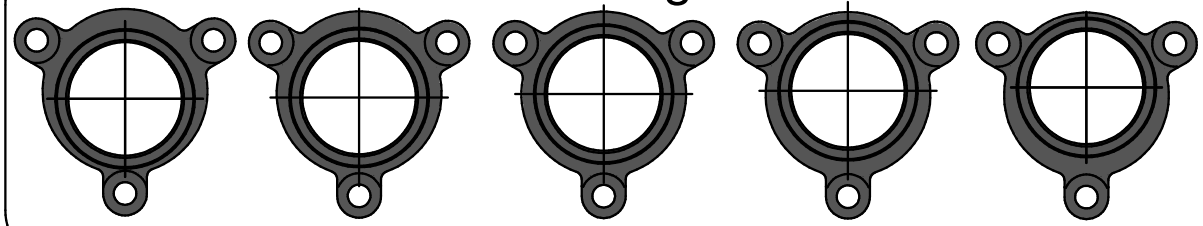

+1,0 | +0,5 | (**0**) | -0,5 | -1,0

Parts List		
Rif.	n°	Code
1	1	Cap 2731
2	3	Cap16004S
3	3	Cap 2746
4	1	Cap 2732/0
5	2	Cap 2012
6	1	Cap 2718
7	1	Cap 2159-1.0
8	1	Cap 2140
9	1	Cap 2065-C
10	1	Cap17006
11	1	Cap 2069
12	3	Cap18025

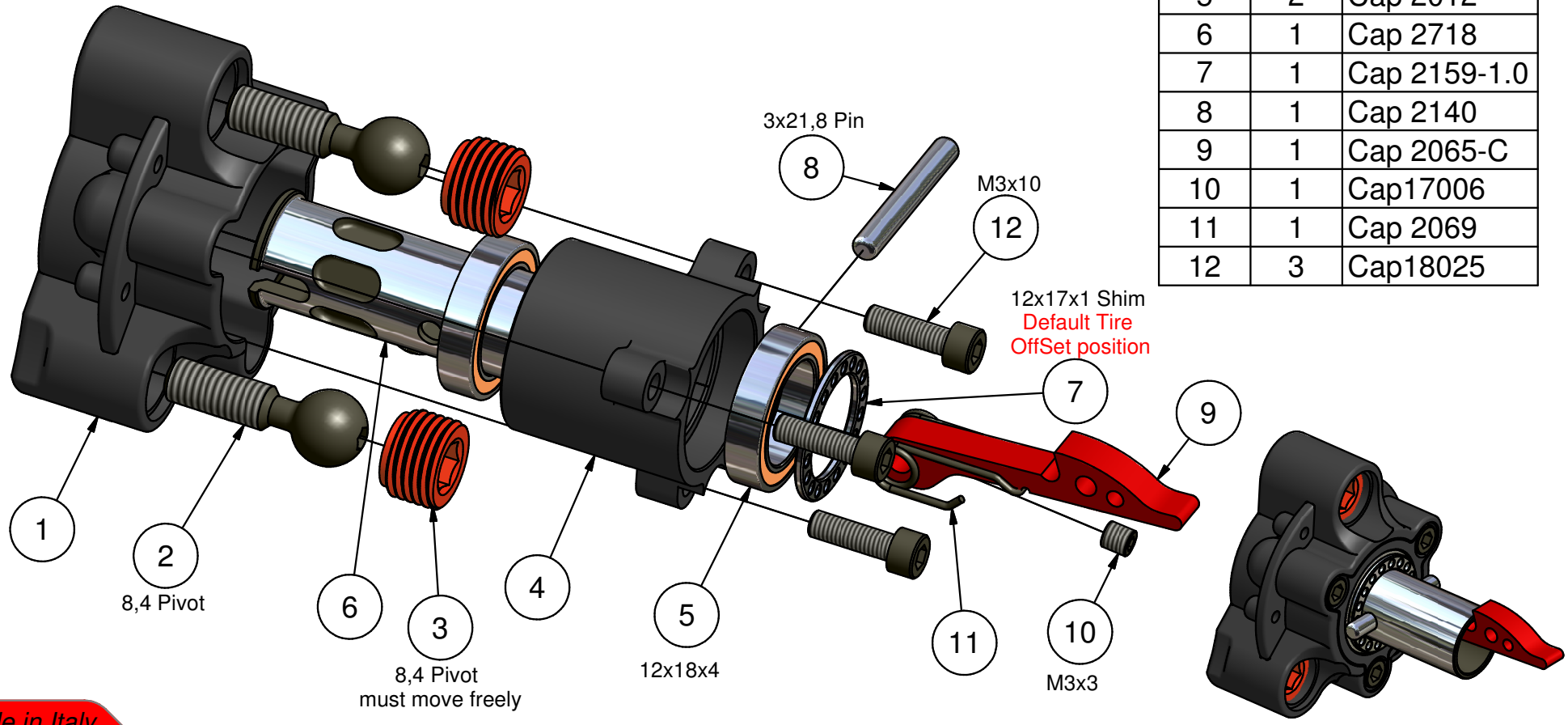

Made in Italy

Step 4.1 - Rear Hub Assembly - BAG 4

Capricorn RC

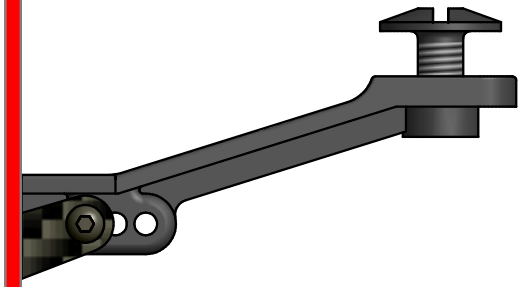

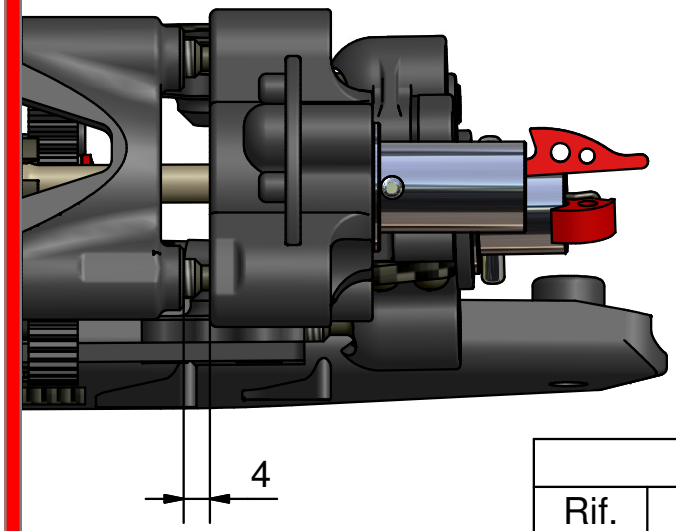

Important Note:
The M3 Flanged nuts (7) must be tightened leaving a small play of rear plastic body support.

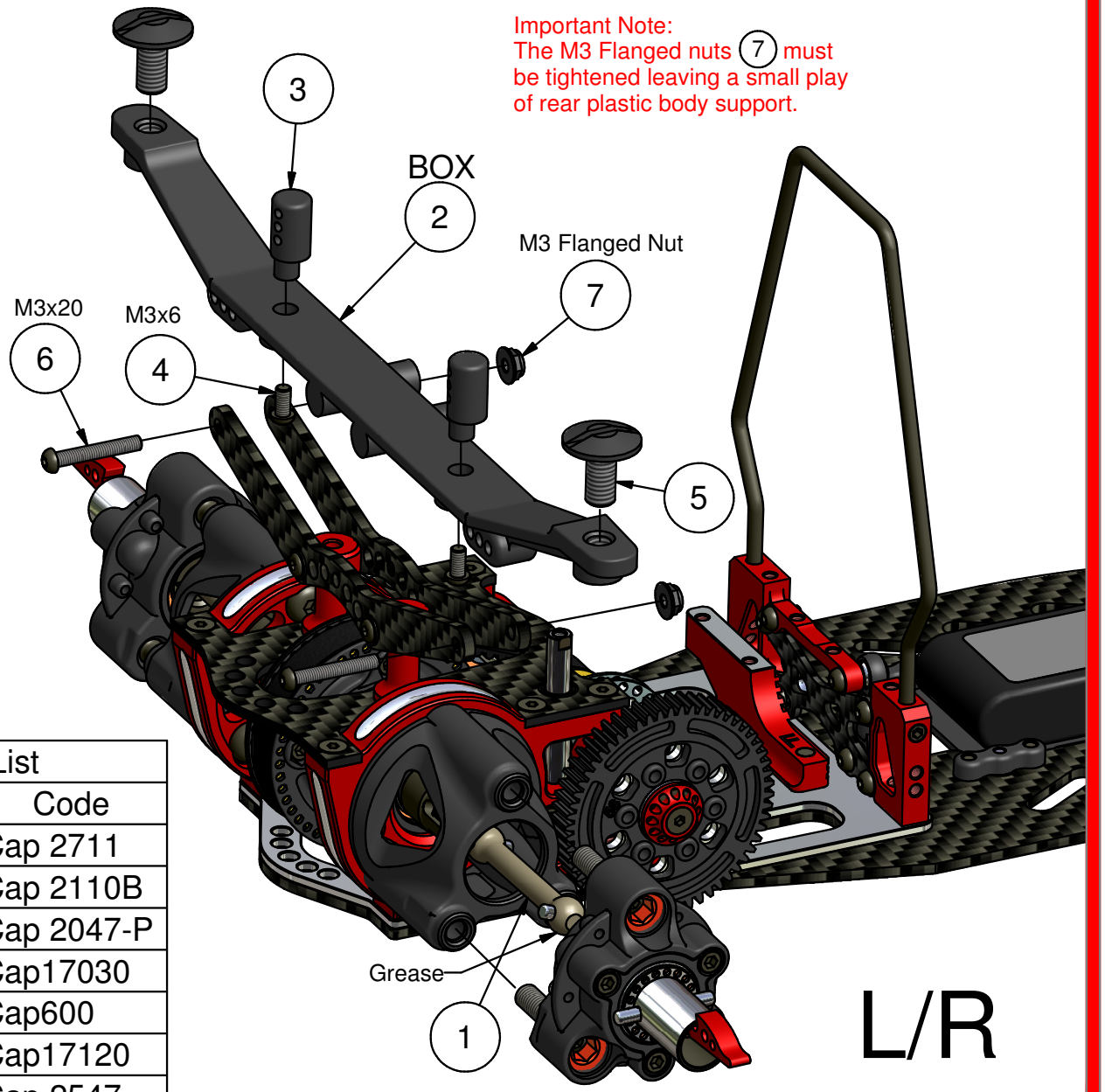

Parts List		
Rif.	n°	Code
1	2	Cap 2711
2	1	Cap 2110B
3	2	Cap 2047-P
4	2	Cap17030
5	2	Cap600
6	2	Cap17120
7	2	Cap 2547

Made in Italy

Step 5.0 - Fuel Tank Assembly - BAG 5

Capricorn RC

Parts List		
Rif.	n°	Code
1	1	Cap 2703
2	2	Cap 2049-P
3	2	Cap17031
4	6	Cap170520B
5	1	Cap 2750
6	2	Cap27002
7	1	Cap16078L
8	1	Cap 2147
9	1	Cap 506XL
10	1	Cap17010
11	2	Cap16015
12	2	Cap17006

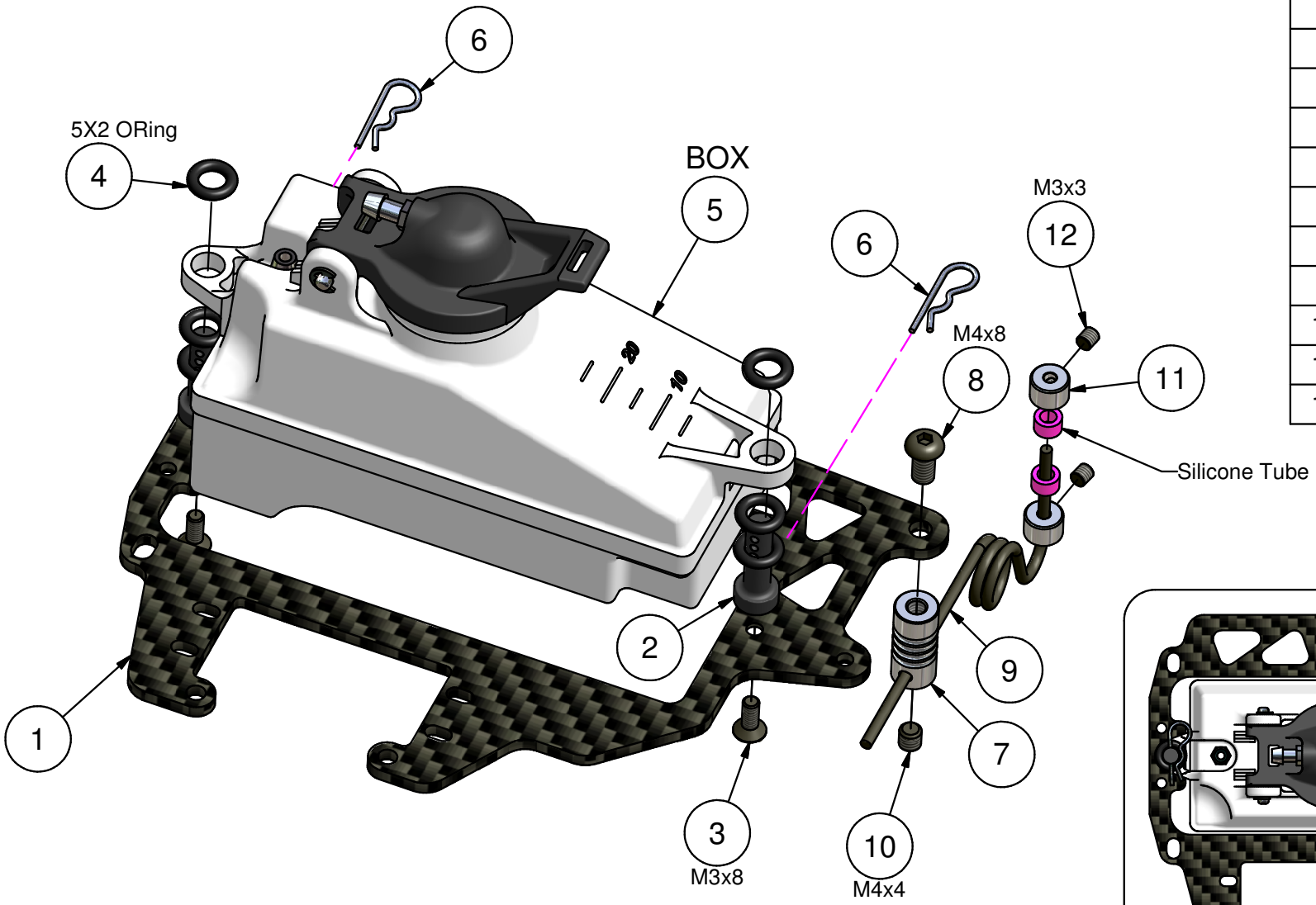

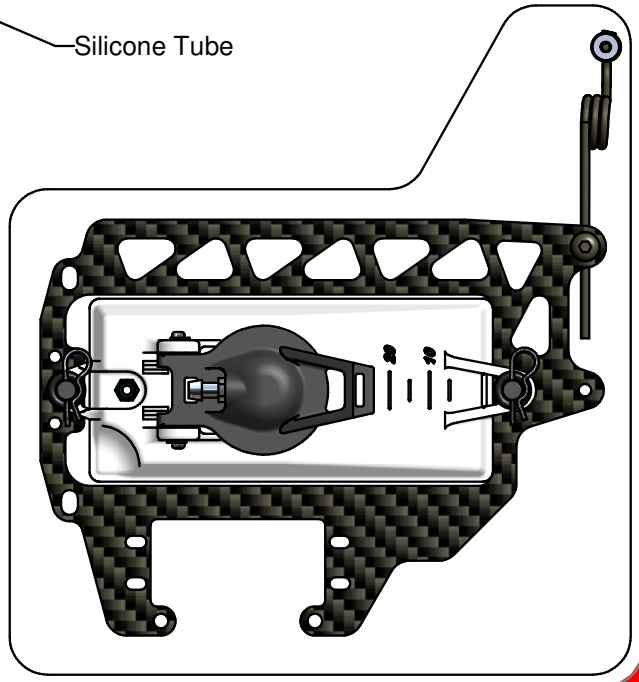

Made in Italy

Step 5.1

- Electronics - BAG 5

Capricorn RC

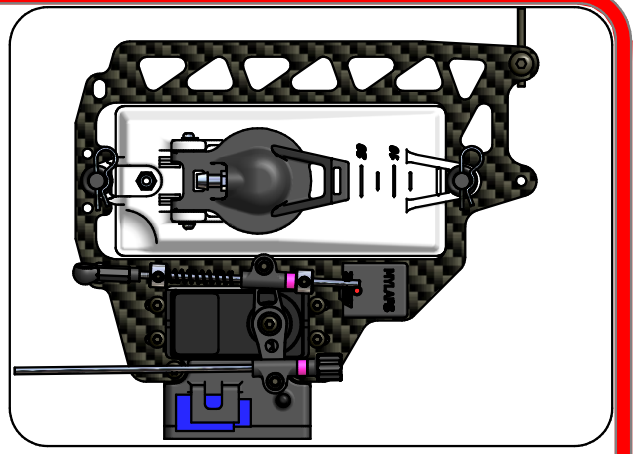

Note:
Insert link in the brake arm before

Note:
Do not overtighten 2,5 nut
Pivot must rotate freely

LP Servo
NOT INCLUDED

58:65mm
Power extension cable
NOT INCLUDED

Transponder
NOT INCLUDED

Double-sided tape
size 12x15
NOT INCLUDED

Receiver
NOT INCLUDED

Silicone Tubing

Silicone Tubing

M3x6

M2,5x10

M3x3

M3 Nut

BOX

M3x10

M2x16

Parts List		
Rif.	n°	Code
1	6	Cap17023
2	2	Cap16048
3	1	Cap18073-K
4	4	Cap17047
5	1	Cap14001
6	1	Cap 601
7	1	Cap17030
8	2	Cap17041
9	2	Cap17021
10	2	Cap17039
11	1	Cap 2392
12	2	Cap17041L
13	1	Cap17041
14	1	Cap17041
15	2	Cap16015
16	2	Cap17006
17	1	Cap17041

Made in Italy

Step 5.2 - Radio Plate Assembly - BAG 5

Capricorn RC

Parts List		
Rif.	n°	Code
1	1	Cap22019
2	1	Cap 2143
3	3	Cap17030
4	2	Cap 2037
4X	2	Cap 2150
5	2	Cap17032

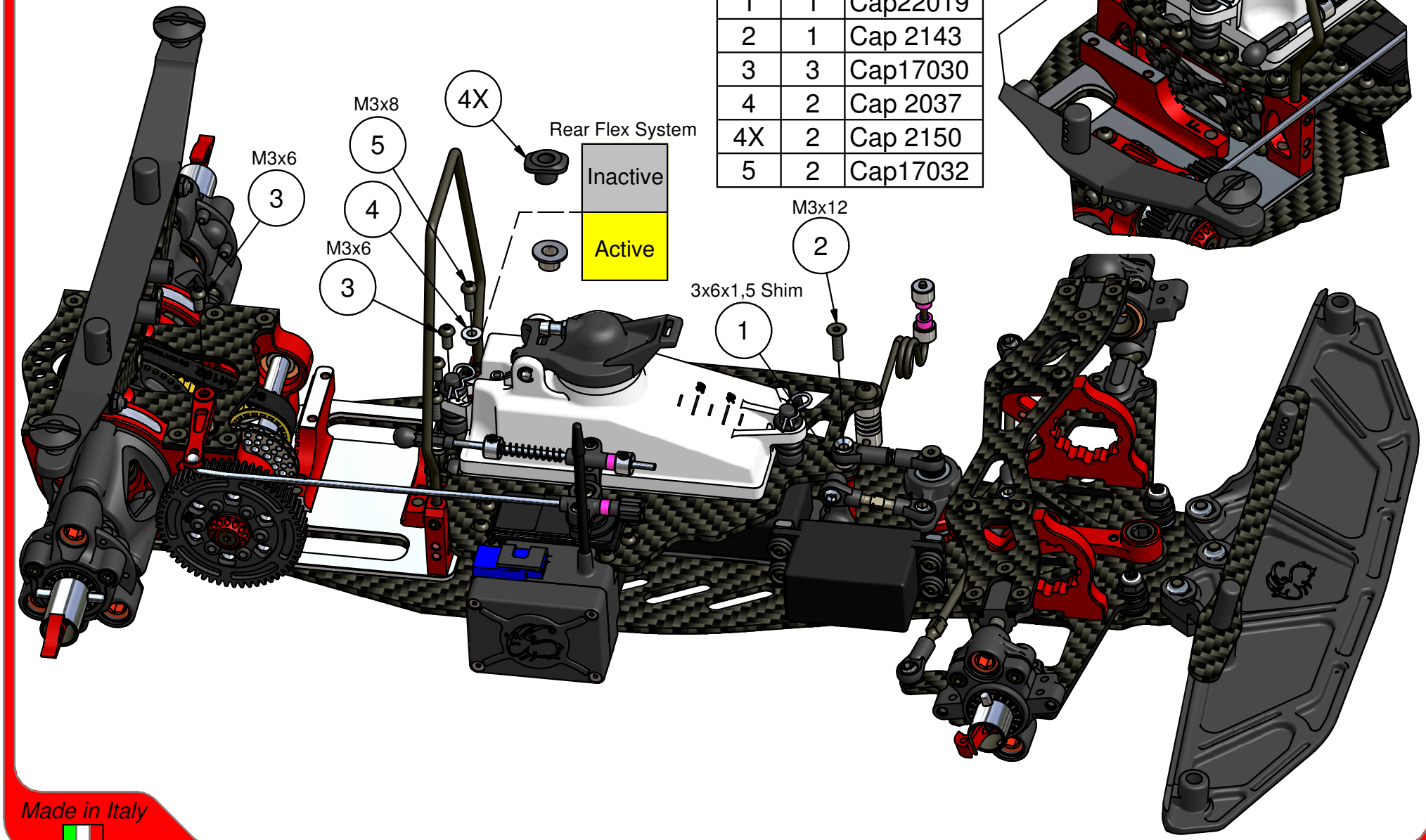

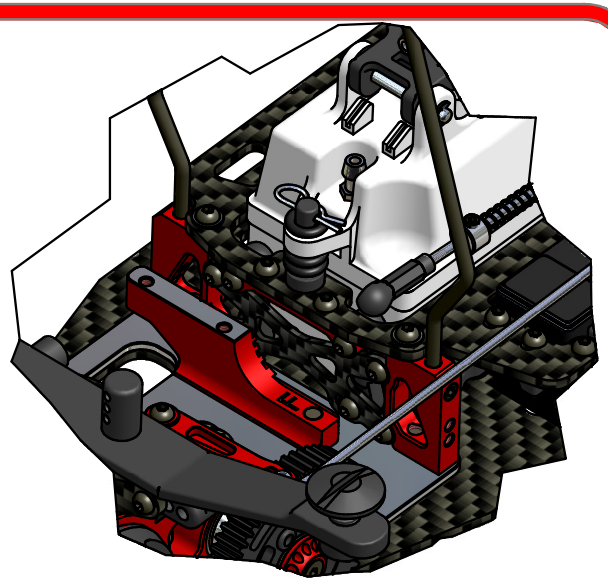

Made in Italy

Step 6.0

- Clutch -
BAG 6

Capricorn RC

Note:
Remove the red highlighted parts
with cutter and smudge carefully

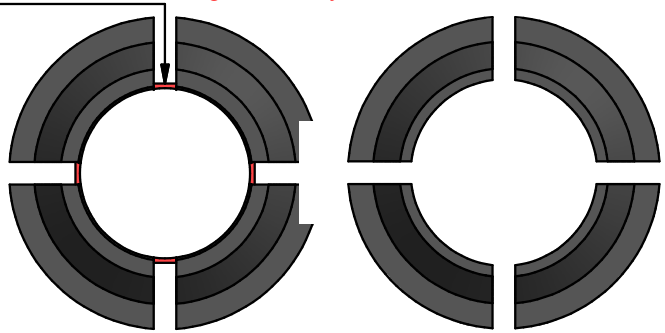

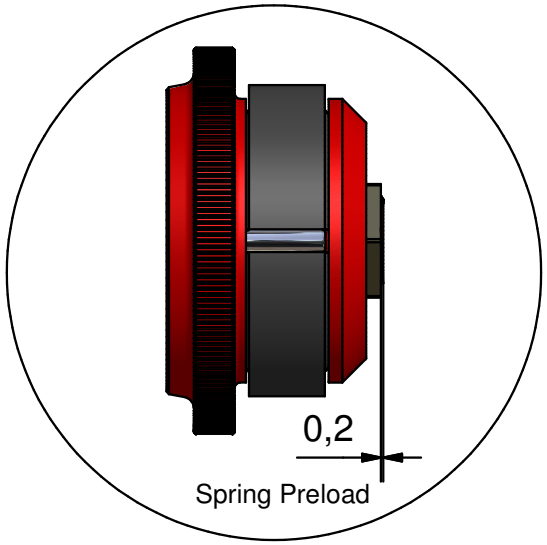

Parts List		
Rif.	n°	Code
1	1	Cap 3166
2	1	Cap 408
3	1	Cap 3167
4	1	Cap 3168
5	1	Cap 2391
6	1	Cap 3170
7	1	Cap 434-0,6
8	1	Cap 2716
9	1	Cap2123-24
10	2	Cap 415
11	1	Cap 3169
12	1	Cap18025

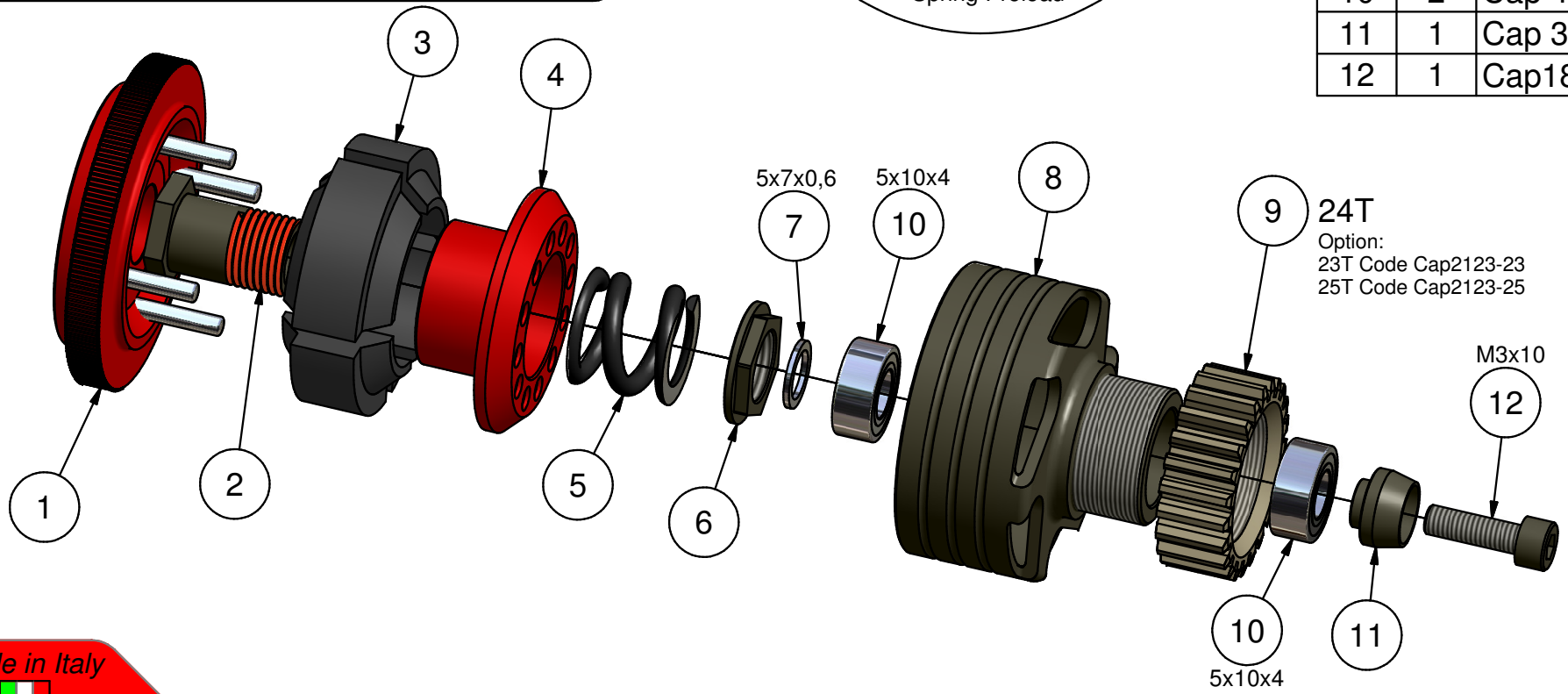

Made in Italy

Step 6.1

Capricorn RC

- GP Final Assembly View -

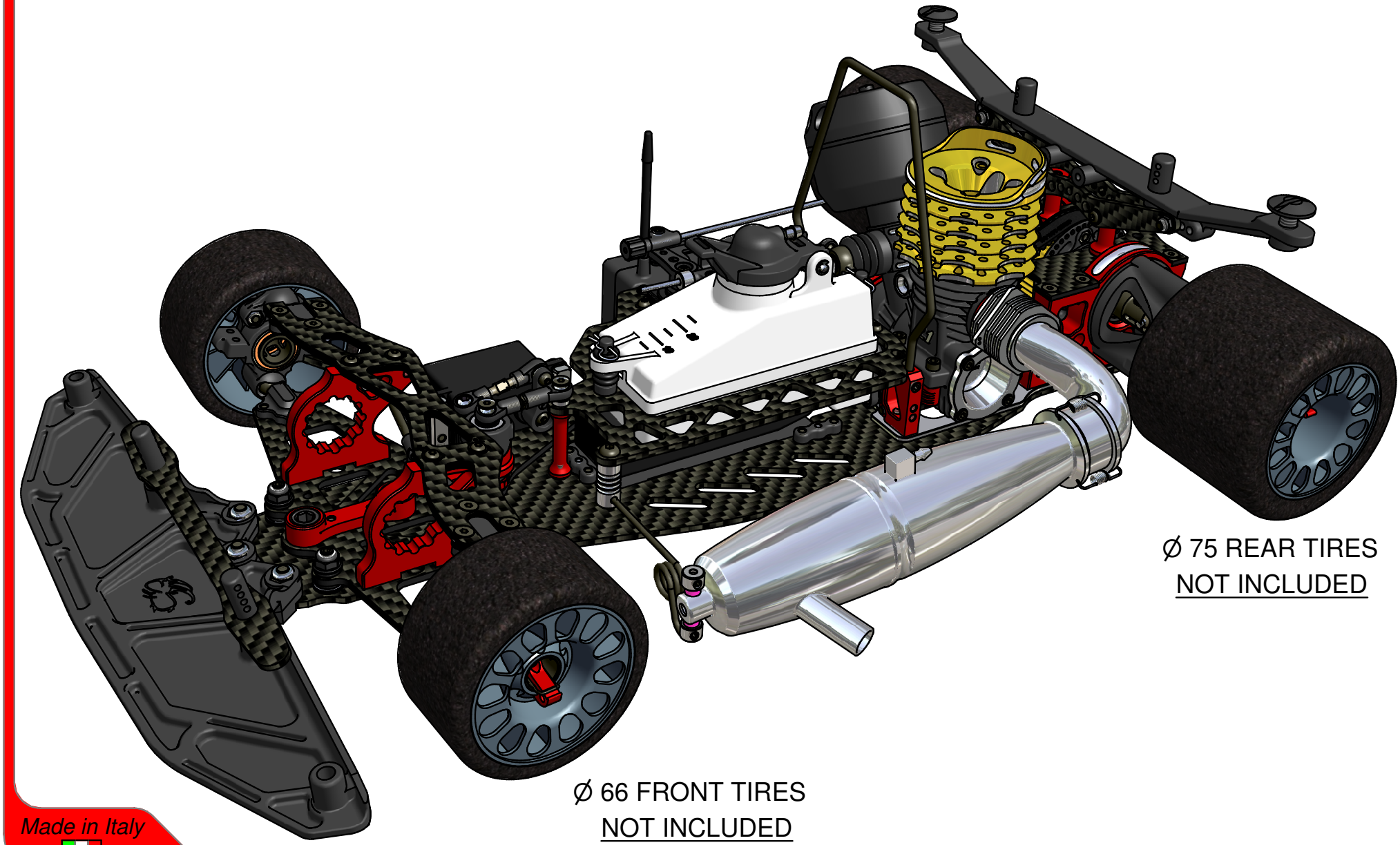

Made in Italy

Step 6.2

Capricorn RC

- GP Final Assembly View -

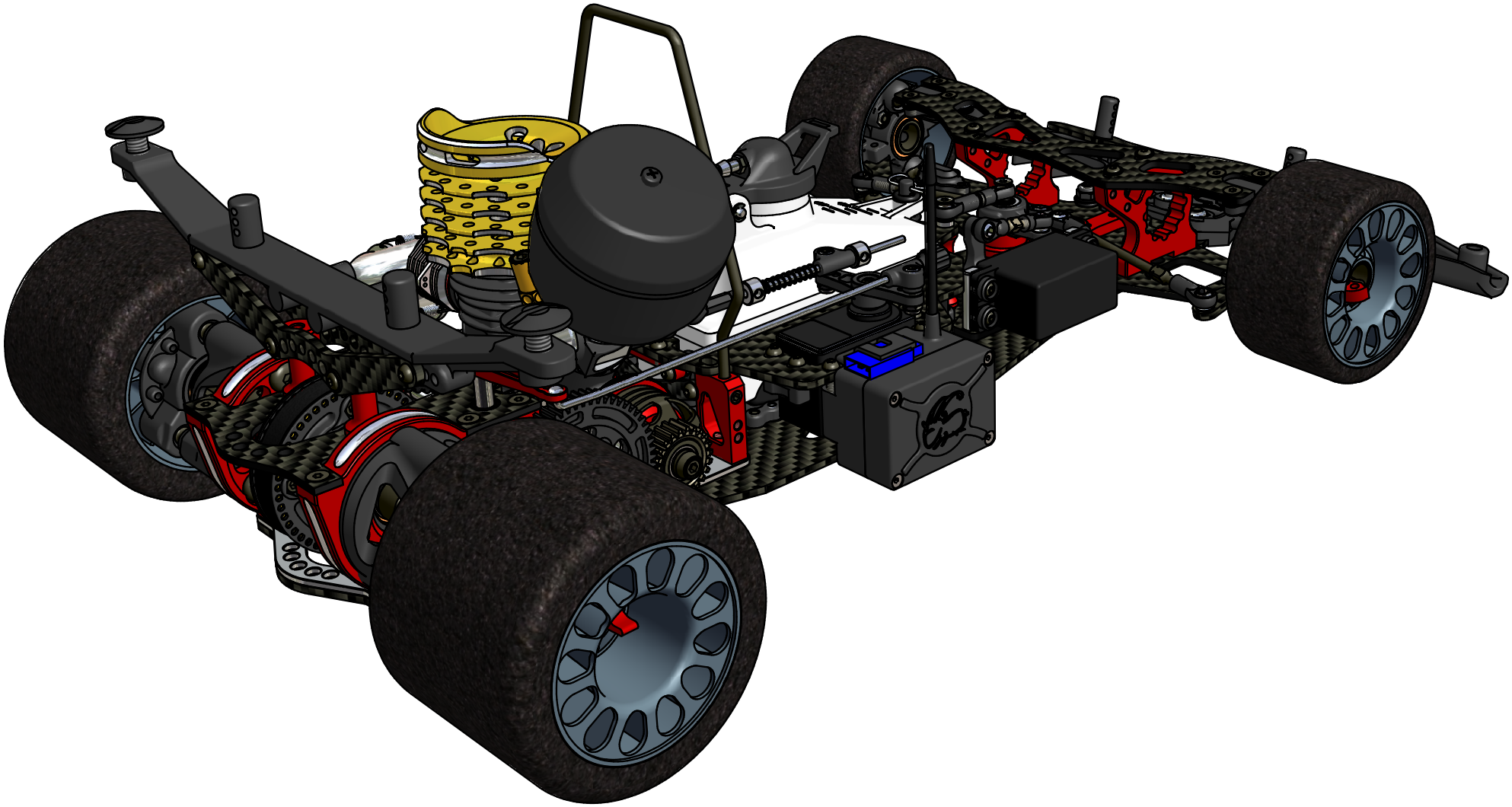

Made in Italy

Step 6.3

Capricorn RC

- GP Final Assembly View -

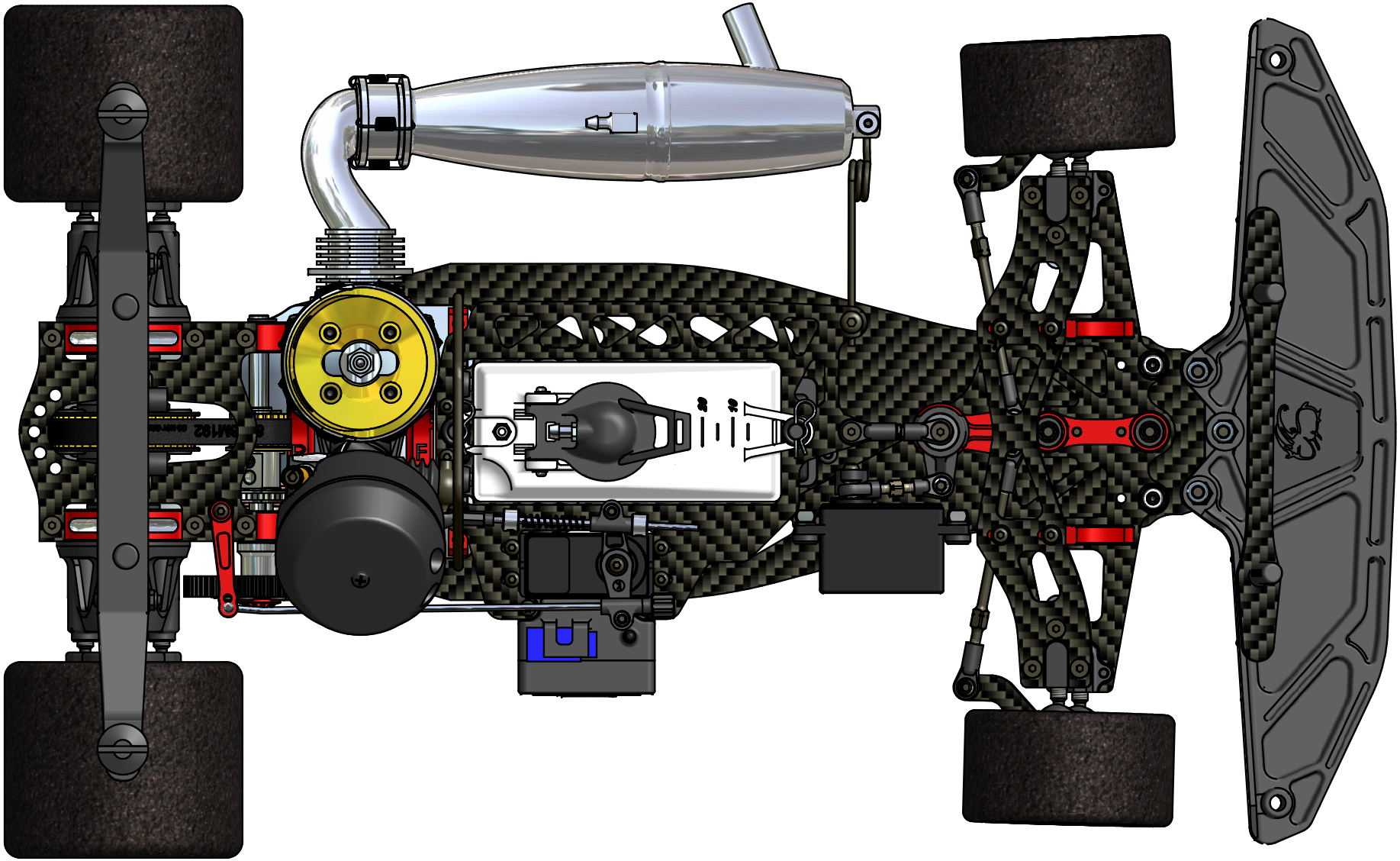

Made in Italy

Step 6.4

Capricorn RC

- GP Final Assembly View -

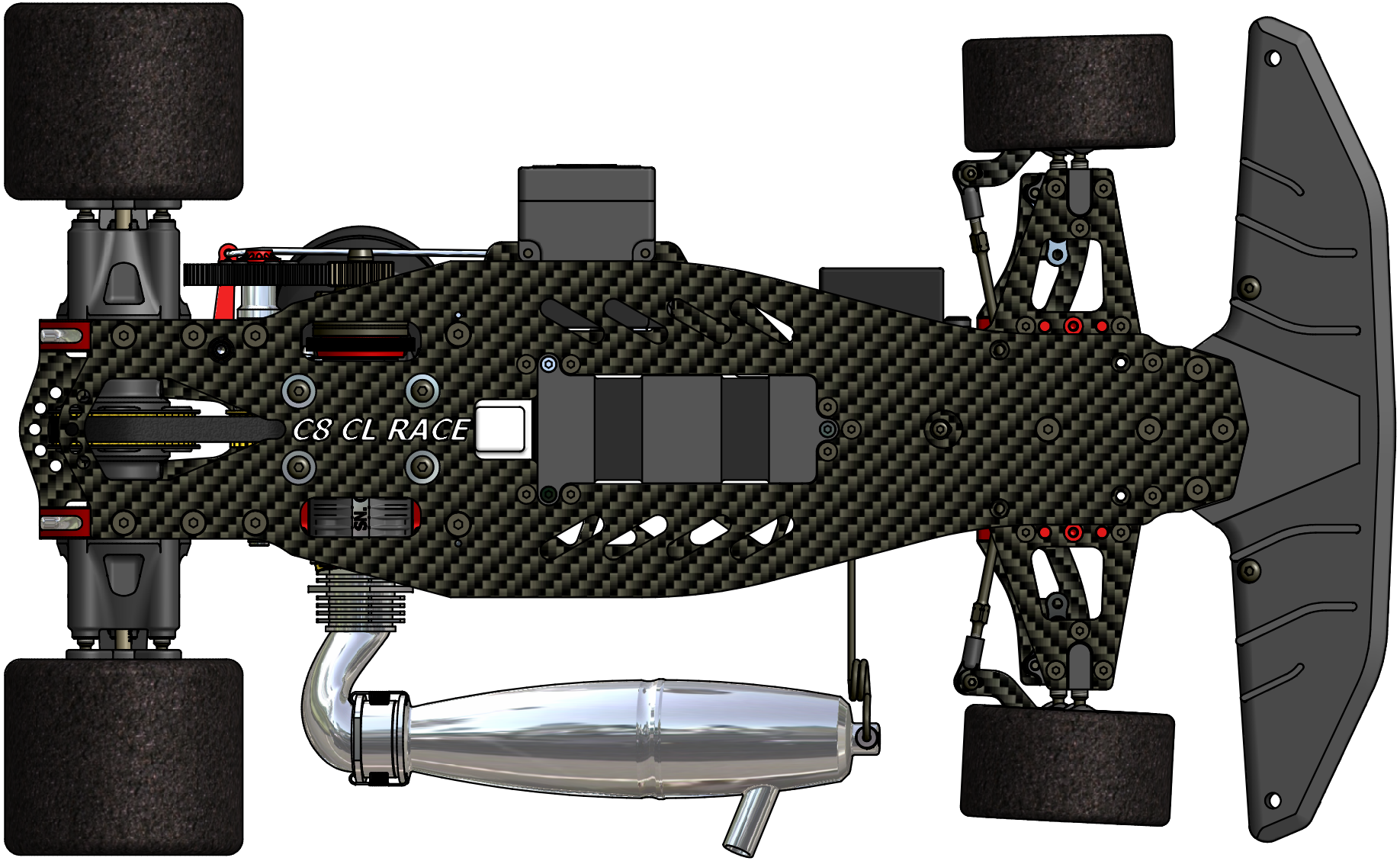

Made in Italy

C8 CL RACE GP DEFAULT SET-UP SHEET Capricorn RC

RACE		DATE	
TRACK		QUALIFING POSITION	
NAME		BEST LAP	/sec
CITY/ COUNTRY		RACE POSITION	
CONTACT		RACE LENGTH	/min

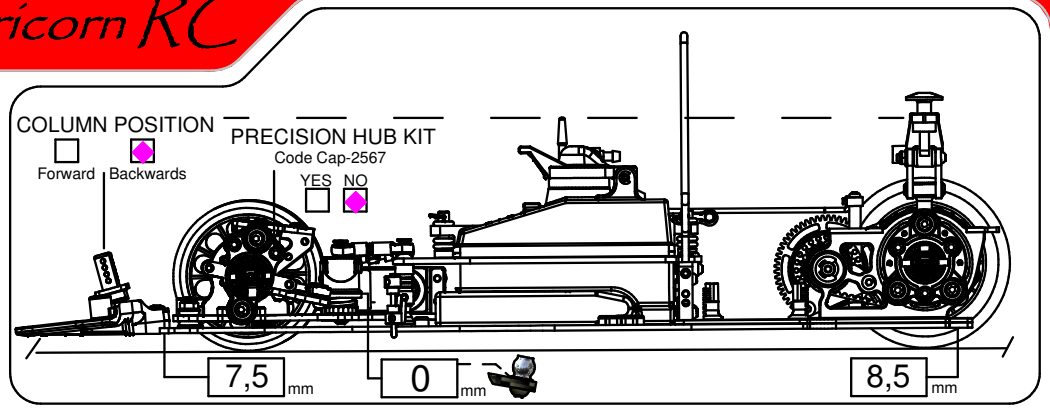

TRACK SURFACE			ASPHALT
TRACK LAYOUT	TECHNICAL	MIXED	FAST
TRACTION	LOW	MEDIUM	HIGH

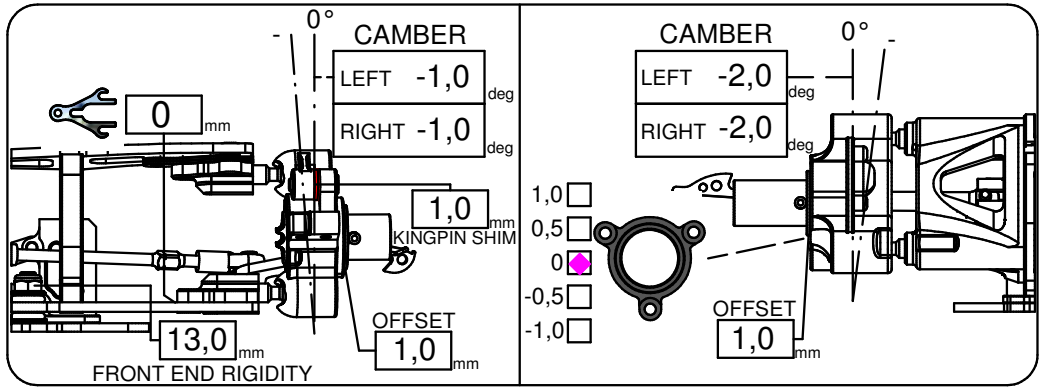

DIFF. GEAR

70.000 cst OIL — 4G ◆ Up ☐ — 6G ☐ Down ☐

CASTER PLATE

7° ◆ 12° — 9° 14°

WIDHT

254,0 mm FRONT — 262,0 mm REAR

TIRES

FRONT		REAR
	BRAND	
45	SHORE	35
mm 65	DIAMETER	74 mm

ADDITIVE TREATED AREA ◆ ◆ ◆

	Carbon	F.Glass
CHASSIS TYPE	☐	◆
REAR PLATE TYPE	☐	◆

GEARING

24 /T	58 /T	2,4
PINION	SPUR GEAR	R. DRIVE RATIO

MOTOR			
MANIFOLD			
CLUTCH	STEEL	SPRING LOAD	0,2 mm
BODY			

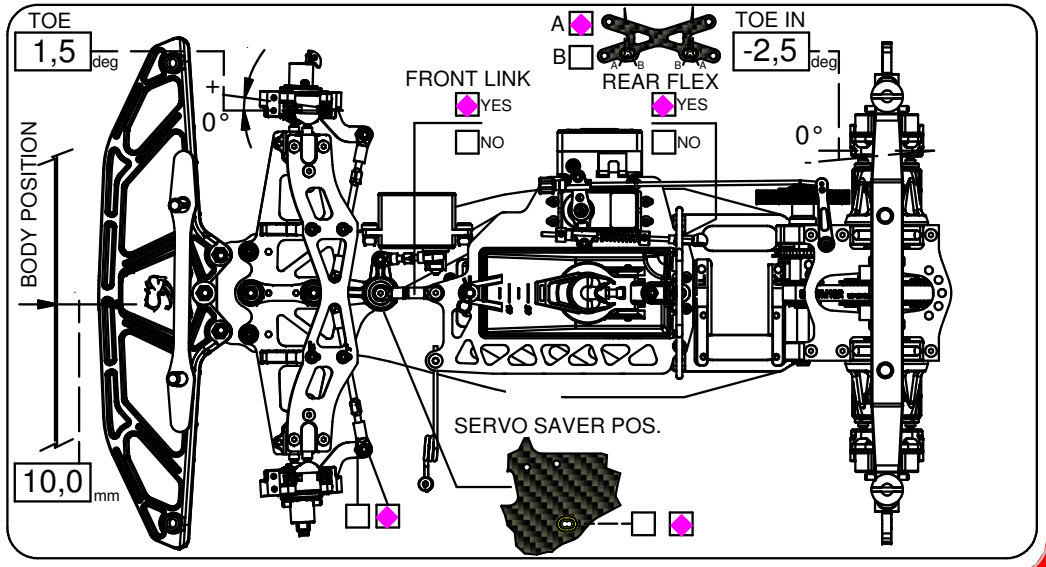

- NOTES -

Made in Italy

C8 CL RACE GP BLANK SET-UP SHEET

Capricorn RC

RACE		DATE	
TRACK		QUALIFING POSITION	
NAME		BEST LAP	/sec
CITY/ COUNTRY		RACE POSITION	
CONTACT		RACE LENGTH	/min

COLUMN POSITION

Forward Backwards

PRECISION HUB KIT

Code Cap-2567

YES NO

mm mm mm

TRACK SURFACE			ASPHALT
TRACK LAYOUT	TECHNICAL	MIXED	FAST
TRACTION	LOW	MEDIUM	HIGH

CAMBER

0°

LEFT deg

RIGHT deg

mm

KINGPIN SHIM mm

OFFSET mm

FRONT END RIGIDITY mm

CAMBER

0°

LEFT deg

RIGHT deg

1,0

0,5

0

-0,5

-1,0

OFFSET mm

DIFF. GEAR

OIL cst

4G Up

6G Down

CASTER PLATE

7° 12°

9° 14°

WIDHT

FRONT mm

REAR mm

TIRES

FRONT		REAR
	B RAND	
	SHORE	
mm	DIAMETER	mm

ADDITIVE TREATED AREA

	Carbon	F.Glass
CHASSIS TYPE		
REAR PLATE TYPE		

GEARING

PINION /T

SPUR GEAR /T

DRIVE RATIO 2,4

MOTOR			
MANIFOLD			
CLUTCH		SPRING LOAD	mm
BODY			

TOE deg

0°

BODY POSITION mm

FRONT LINK

YES

NO

A

B

REAR FLEX

YES

NO

TOE IN deg

0°

SERVO SAVER POS.

- NOTES -

Made in Italy

Step 7.0

- EP Convertion - BAG 7

Capricorn RC

Parts List		
Rif.	n°	Code
1	1	Cap 2737
2	8	Cap17027
3	4	Cap 2740
3X	4	Cap 2739
4	8	Cap17040
5	1	Cap 2322
6	4	Cap 2147
7	1	Cap 2328
8	2	Cap17030

2x 2S STD HV LiPo

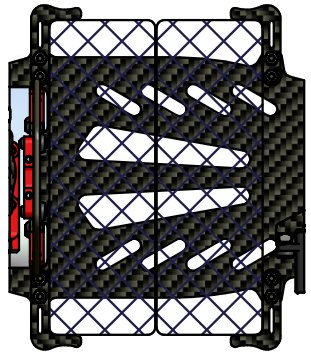

2x 2S SHORT HV LiPo

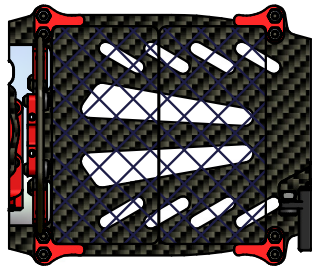

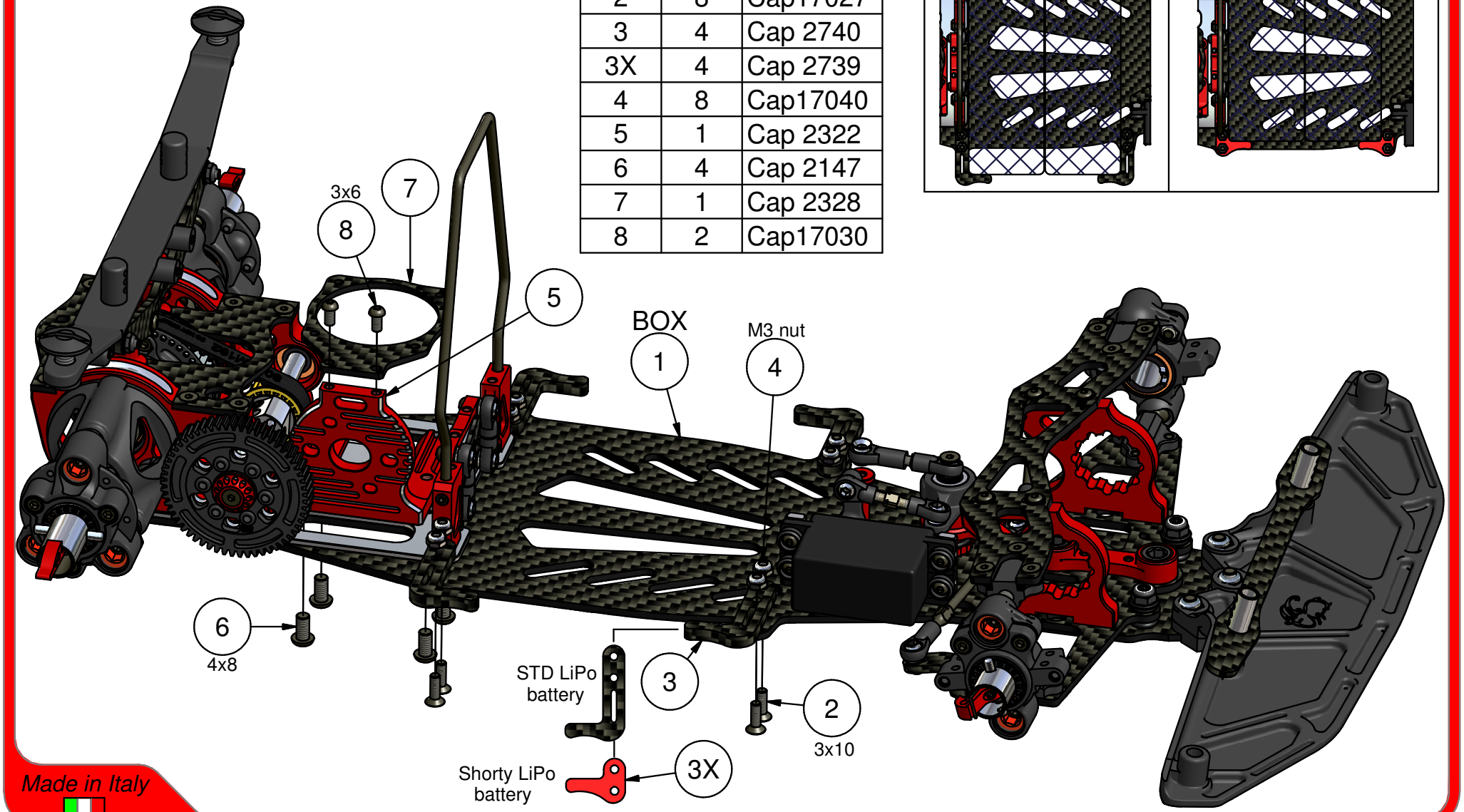

Made in Italy

Step 7.1

- EP Convertion - BAG 7

Capricorn RC

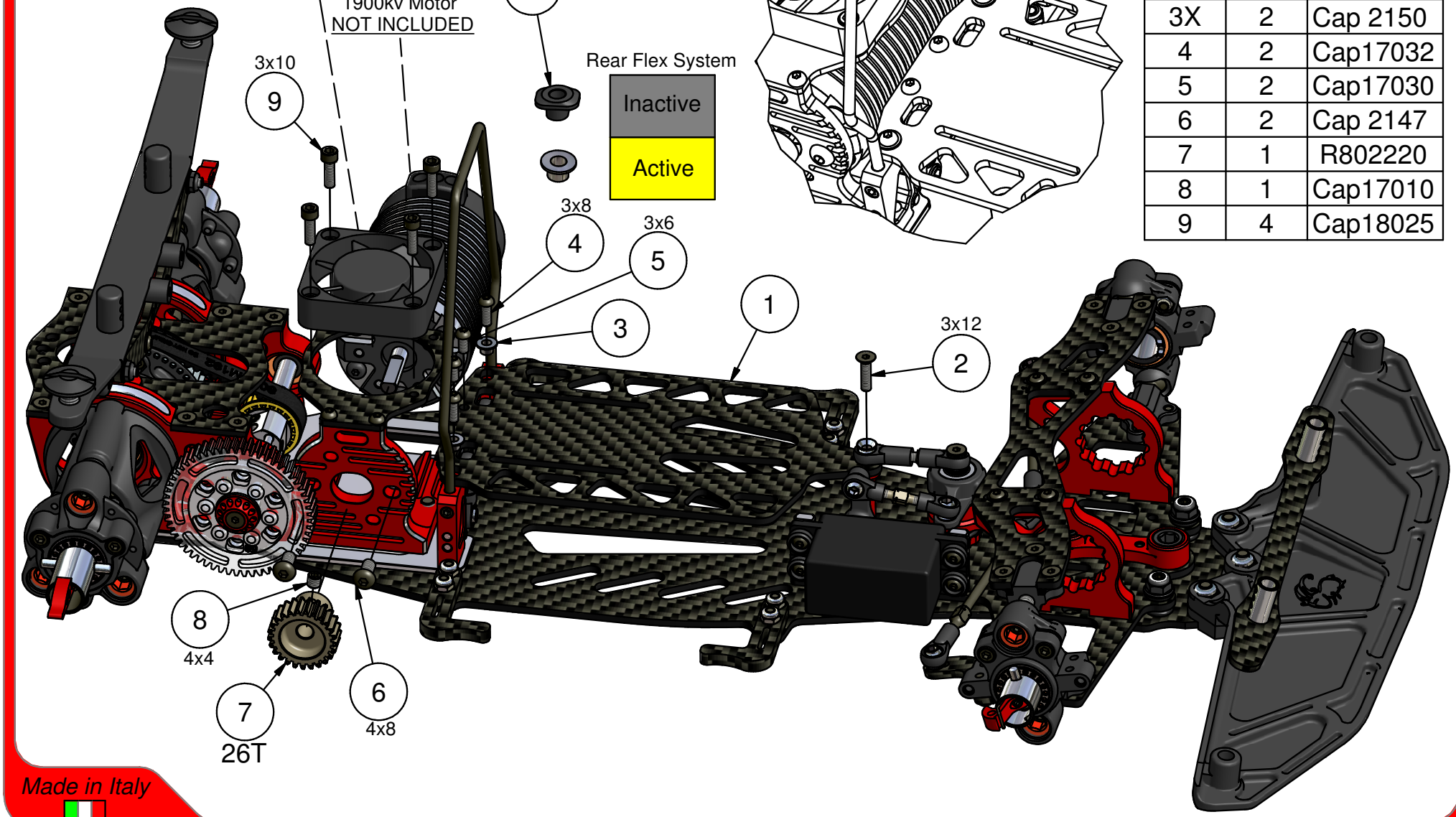

Parts List		
Rif.	n°	Code
1	1	Cap 2738
2	1	Cap 2143
3	2	Cap 2037
3X	2	Cap 2150
4	2	Cap17032
5	2	Cap17030
6	2	Cap 2147
7	1	R802220
8	1	Cap17010
9	4	Cap18025

Made in Italy

Step 7.2

- EP Convertion -

Capricorn RC

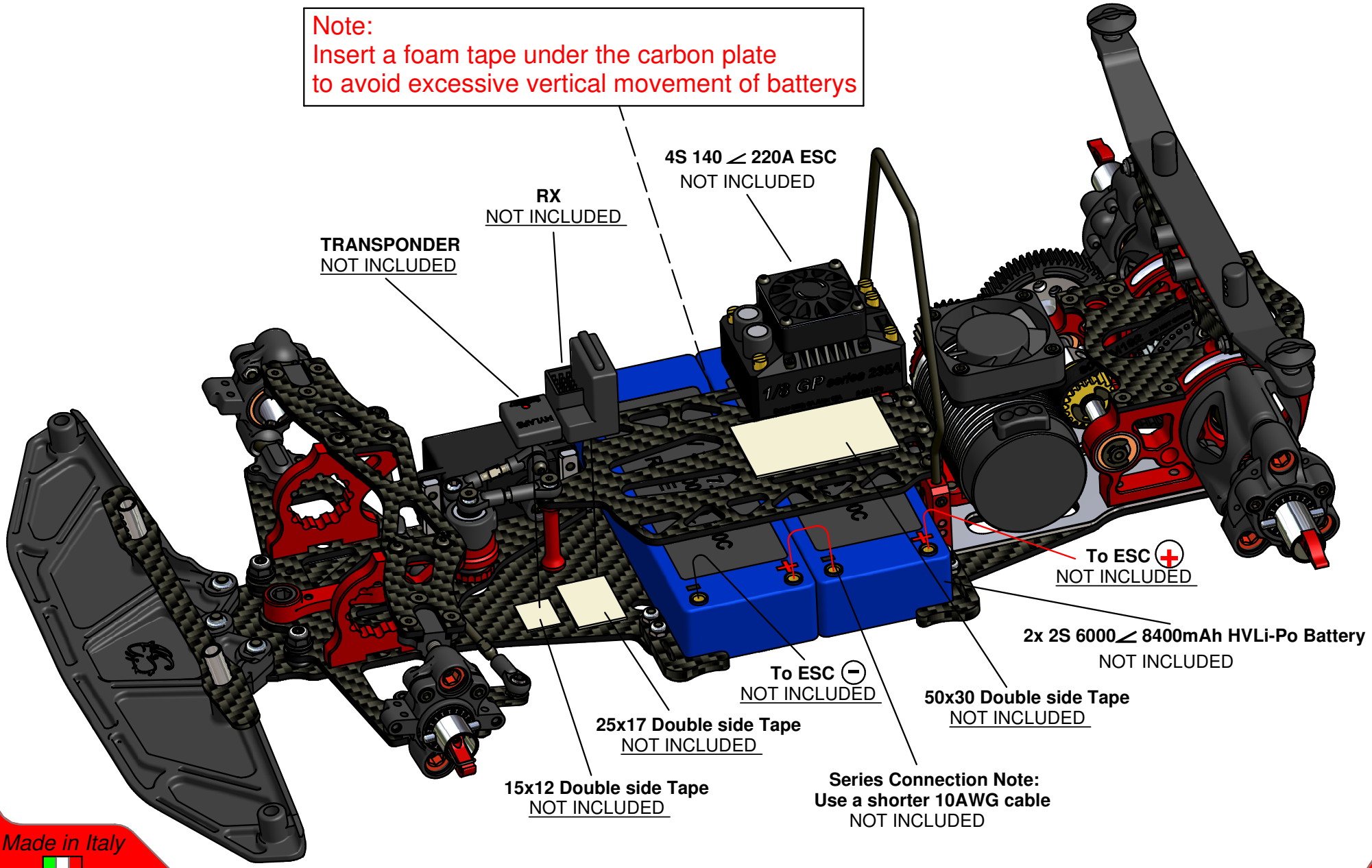

Made in Italy

Step 7.3

- EP Convertion -

Capricorn RC

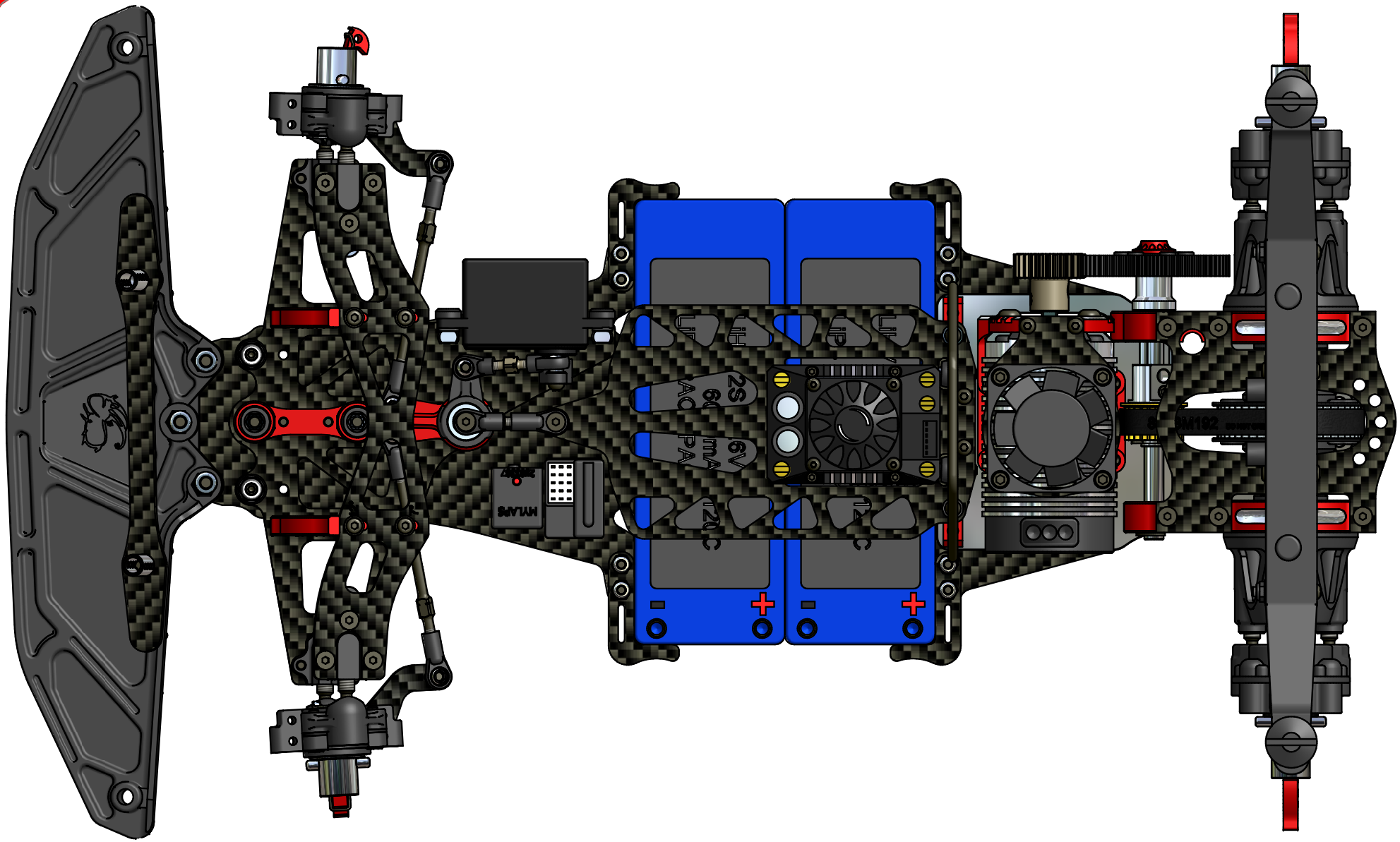

Made in Italy

Step 7.4

- EP Convertion -

Capricorn RC

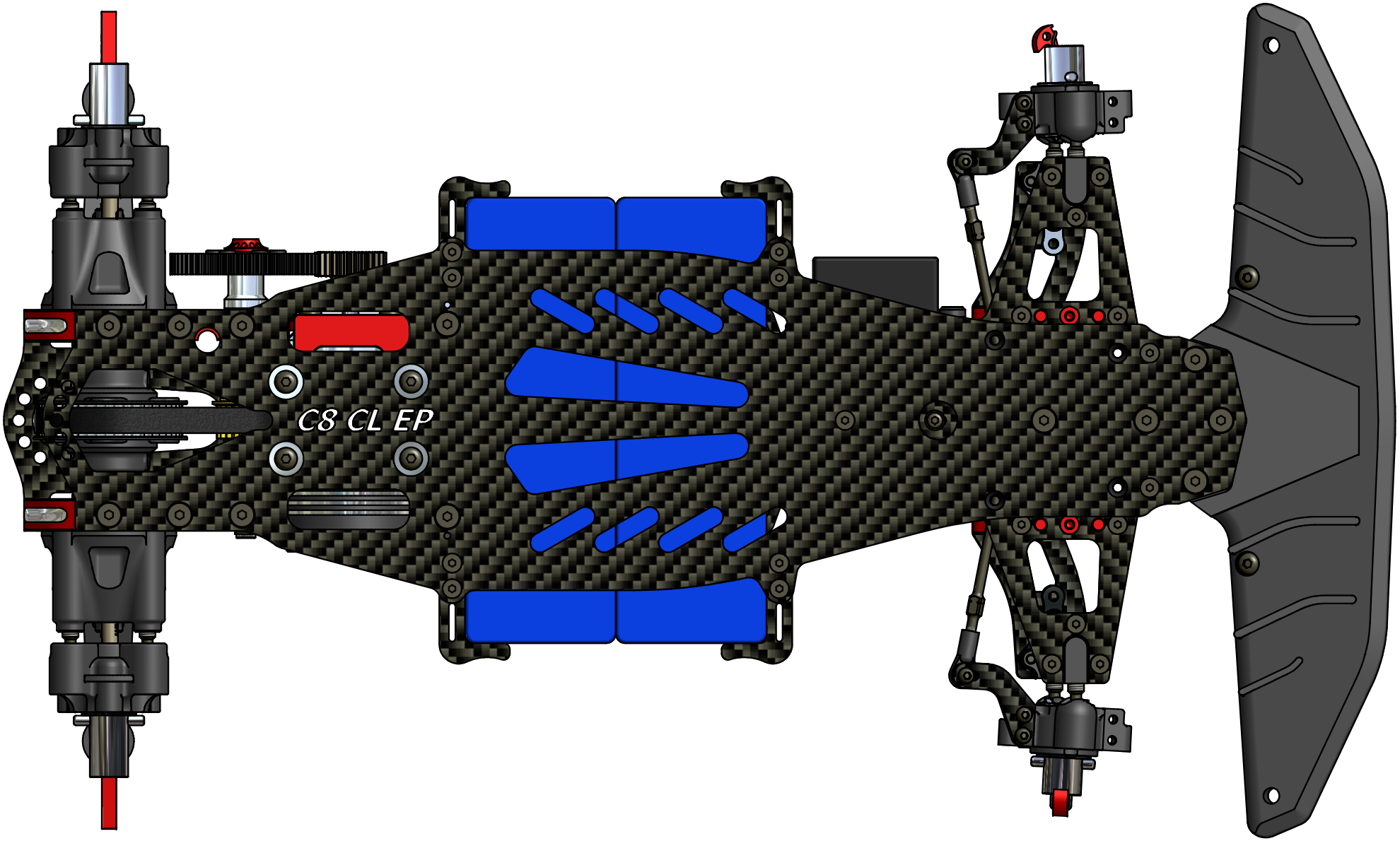

Made in Italy

C8 CL RACE EP DEFAULT SET-UP SHEET Capricorn RC

RACE		DATE	
TRACK		QUALIFING POSITION	
NAME		BEST LAP	/sec
CITY/ COUNTRY		RACE POSITION	
CONTACT		RACE LENGTH	/min

COLUMN POSITION: ◆ Forward ☐ Backwards

PRECISION HUB KIT Code Cap-2567: YES ☐ NO ◆

6,5 mm | 0 mm | 7,5 mm

BOOST SETTING: LOW ◆ HIGH

TRACK LAYOUT	☐ TECHNICAL	◆ MIXED	☐ FAST
TRACTION	☐ LOW	◆ MEDIUM	☐ HIGH

CAMBER: LEFT -1,0 deg; RIGHT -1,0 deg

0 mm; 1,0 mm KINGPIN SHIM; OFFSET 1,0 mm; 13,0 mm FRONT END RIGIDITY

CAMBER: LEFT -2,0 deg; RIGHT -2,0 deg

1,0 ☐; 0,5 ☐; 0 ◆; -0,5 ☐; -1,0 ☐

OFFSET 1,0 mm

DIFF. GEAR: 70.000 cst OIL; 4G ◆ Up ☐; 6G ☐ Down ☐

CASTER PLATE: 7° ◆ 12°; 9° 14°

TURBO: 10 %

TURBO DELAY: 0,3 /sec

TIRES

FRONT		REAR
	BRAND	
45	SHORE	35
63 mm	DIAMETER	72 mm
254 mm	WIDHT	262 mm

ADDITIVE TREATED AREA: ◆

	Carbon	F.Glass
CHASSIS TYPE	☐	◆
REAR PLATE TYPE	☐	◆

GEARING: 26 /T PINION; 58 /T SPUR GEAR; 2,4 R. DRIVE RATIO

MOTOR	1900 KV
ESC	4s 140A
BATTERY	2x 2s HV Li-Po
BODY	

TOE 1,5 deg

BATTERY LAYOUT: ◆ STD ☐ SHORT

A ◆ B ☐

TOE IN -2,5 deg

FRONT LINK: ☐ NO ◆ YES

REAR FLEX: ☐ NO ◆ YES

BODY POSITION 10,0 mm

SERVO SAVER POS. ☐ ◆

- NOTES -

Made in Italy

C8 CL RACE EP BLANK SET-UP SHEET

Capricorn RC

RACE		DATE	
TRACK		QUALIFING POSITION	
NAME		BEST LAP	/sec
CITY/ COUNTRY		RACE POSITION	
CONTACT		RACE LENGTH	/min

COLUMN POSITION
Forward ☐ Backwards ☐

PRECISION HUB KIT
Code Cap-2567
YES ☐ NO ☐

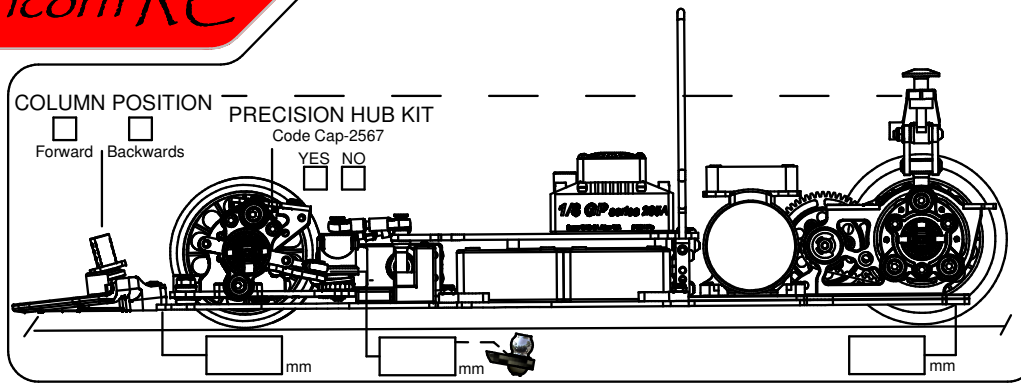

BOOST SETTING — LOW ☐☐☐☐☐☐☐☐ HIGH

TRACK LAYOUT	☐ TECHNICAL	☐ MIXED	☐ FAST
TRACTION	☐ LOW	☐ MEDIUM	☐ HIGH

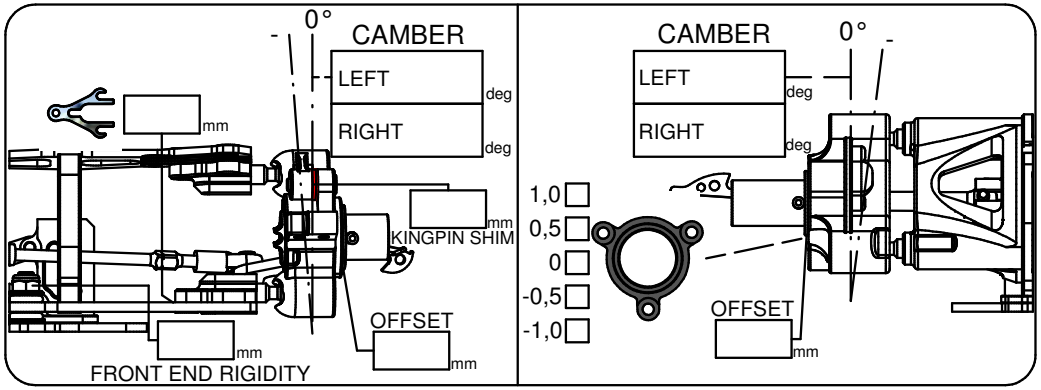

DIFF. GEAR
OIL ☐ cst
4G ☐ Up ☐
6G ☐ Down ☐

CASTER PLATE
7° 12° ☐☐
9° 14° ☐☐

TURBO ☐ %
TURBO DELAY ☐ /sec

TIRES

FRONT		REAR
☐	BRAND	☐
☐	SHORE	☐
mm ☐	DIAMETER	☐ mm
mm ☐	WIDHT	☐ mm

ADDITIVE TREATED AREA

	Carbon	F.Glass
CHASSIS TYPE	☐	☐
REAR PLATE TYPE	☐	☐

GEARING
PINION ☐ /T
SPUR GEAR ☐ /T
2,4 R. DRIVE RATIO

MOTOR	
ESC	
BATTERY	
BODY	

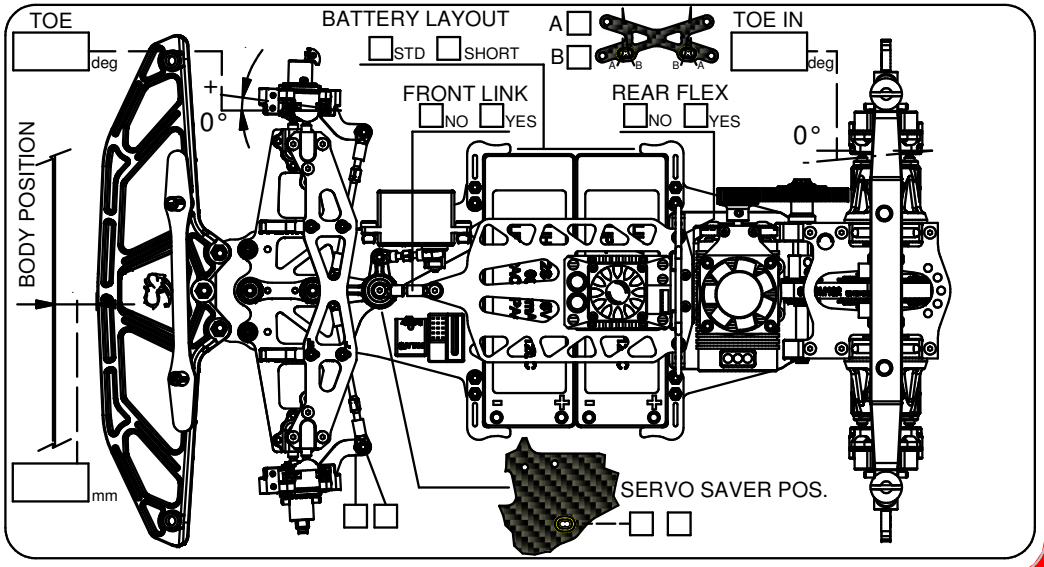

- NOTES -

Made in Italy

- Notes -

RATIO		Spur									
Pinion	56	57	58								
23	2,435	2,478	2,522								
24	2,333	2,375	2,417			**Brushless Motor:**	1900kv				
25	2,240	2,280	2,320			**Battery:**	4S (2 x 2S HV 8400mAh 120C)				
26	2,154	2,192	2,231								
27	2,074	2,111	2,148								
Rollout	***mm/RPM***										
Tire ø	**67**	**68**	**69**	**70**	**71**	**72**	**73**	**74**	**75**	**76**	**77**
Pinion						**Spur**	**56**				
23	36,021	36,559	37,096	37,634	38,171	38,709	39,247	39,784	40,322	40,860	41,397
24	37,587	38,148	38,709	39,270	39,831	40,392	40,953	41,514	42,075	42,636	43,197
25	39,153	39,738	40,322	40,906	41,491	42,075	42,659	43,244	43,828	44,413	44,997
26	40,719	41,327	41,935	42,543	43,150	43,758	44,366	44,974	45,581	46,189	46,797
27	42,285	42,917	43,548	44,179	44,810	45,441	46,072	46,703	47,334	47,966	48,597
						Spur	**57**				
23	35,389	35,917	36,445	36,974	37,502	38,030	38,558	39,086	39,614	40,143	40,671
24	36,928	37,479	38,030	38,581	39,132	39,683	40,235	40,786	41,337	41,888	42,439
25	38,466	39,040	39,614	40,189	40,763	41,337	41,911	42,485	43,059	43,633	44,207
26	40,005	40,602	41,199	41,796	42,393	42,990	43,587	44,184	44,782	45,379	45,976
27	41,544	42,164	42,784	43,404	44,024	44,644	45,264	45,884	46,504	47,124	47,744
						Spur	**58**				
23	34,779	35,298	35,817	36,336	36,855	37,374	37,893	38,412	38,931	39,451	39,970
24	36,291	36,833	37,374	37,916	38,458	38,999	39,541	40,082	40,624	41,166	41,707
25	37,803	38,367	38,931	39,496	40,060	40,624	41,188	41,753	42,317	42,881	43,445
26	39,315	39,902	40,489	41,076	41,662	42,249	42,836	43,423	44,009	44,596	45,183
27	40,827	41,437	42,046	42,655	43,265	43,874	44,483	45,093	45,702	46,312	46,921
	Zero Boost / zero Turbo					***Speed calculation example***					
	Kv motor	1900	RPM								
	Rollout	44,009	mm	V=	**85,289**	Km/h	***V(km/h)= Volt batt × Kv motor × rollout × 0,00006***				