Capricorn RC

- Side to Side Li-Po Battery - OPTION

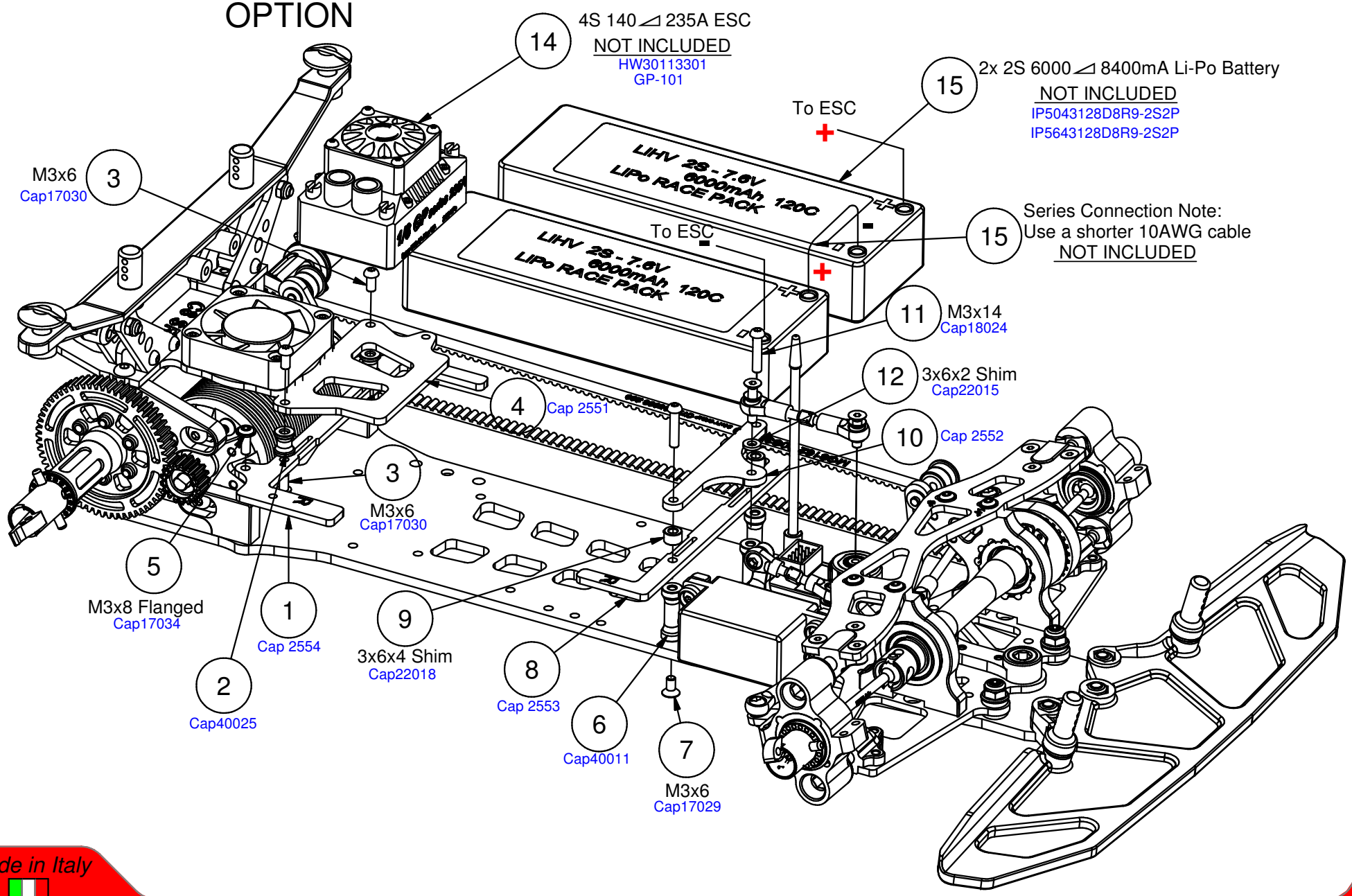

Made in Italy